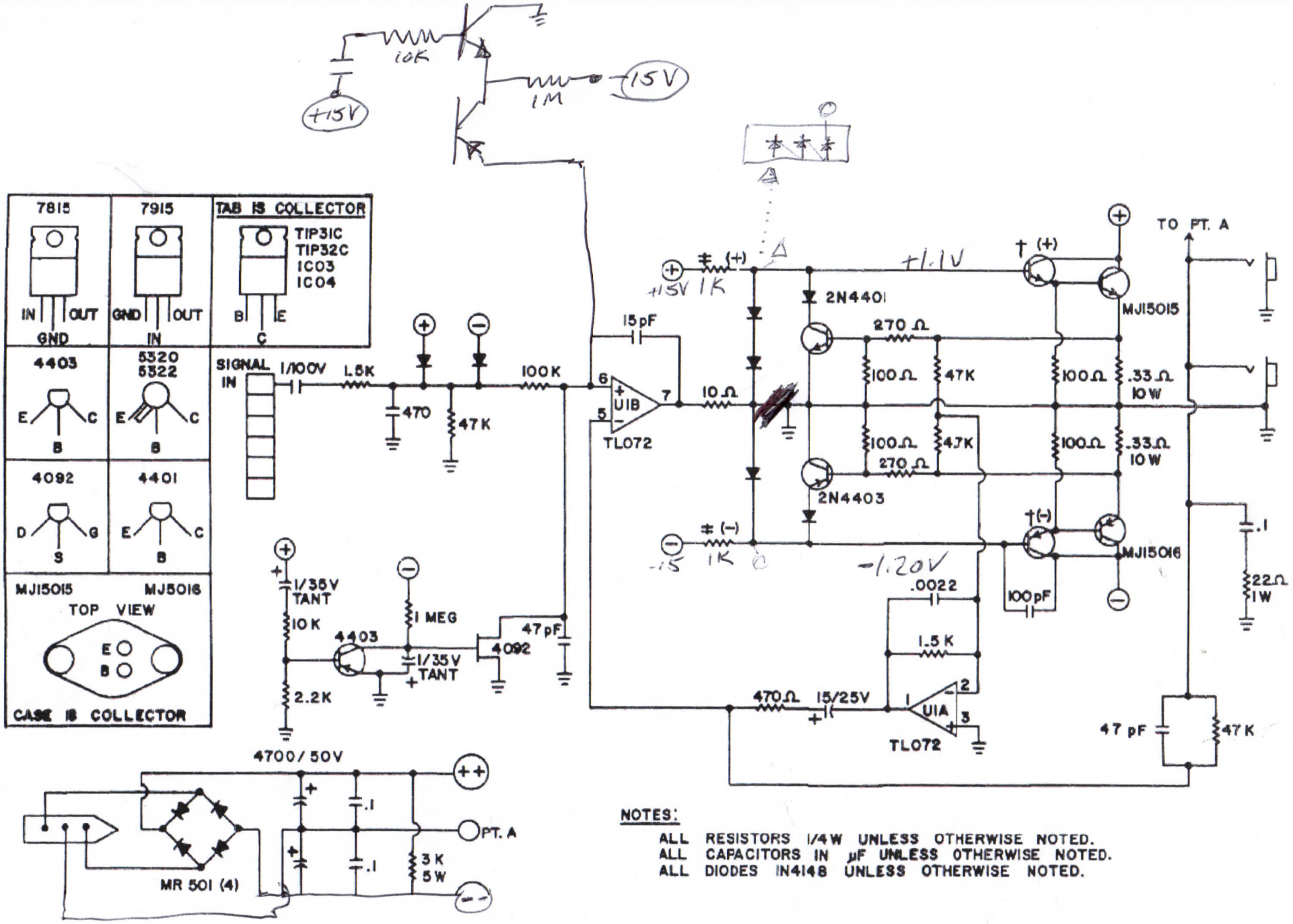


NOTES:

ALL RESISTORS 1/4W UNLESS OTHERWISE NOTED.
ALL CAPACITORS IN µF UNLESS OTHERWISE NOTED.
ALL DIODES IN4148 UNLESS OTHERWISE NOTED.