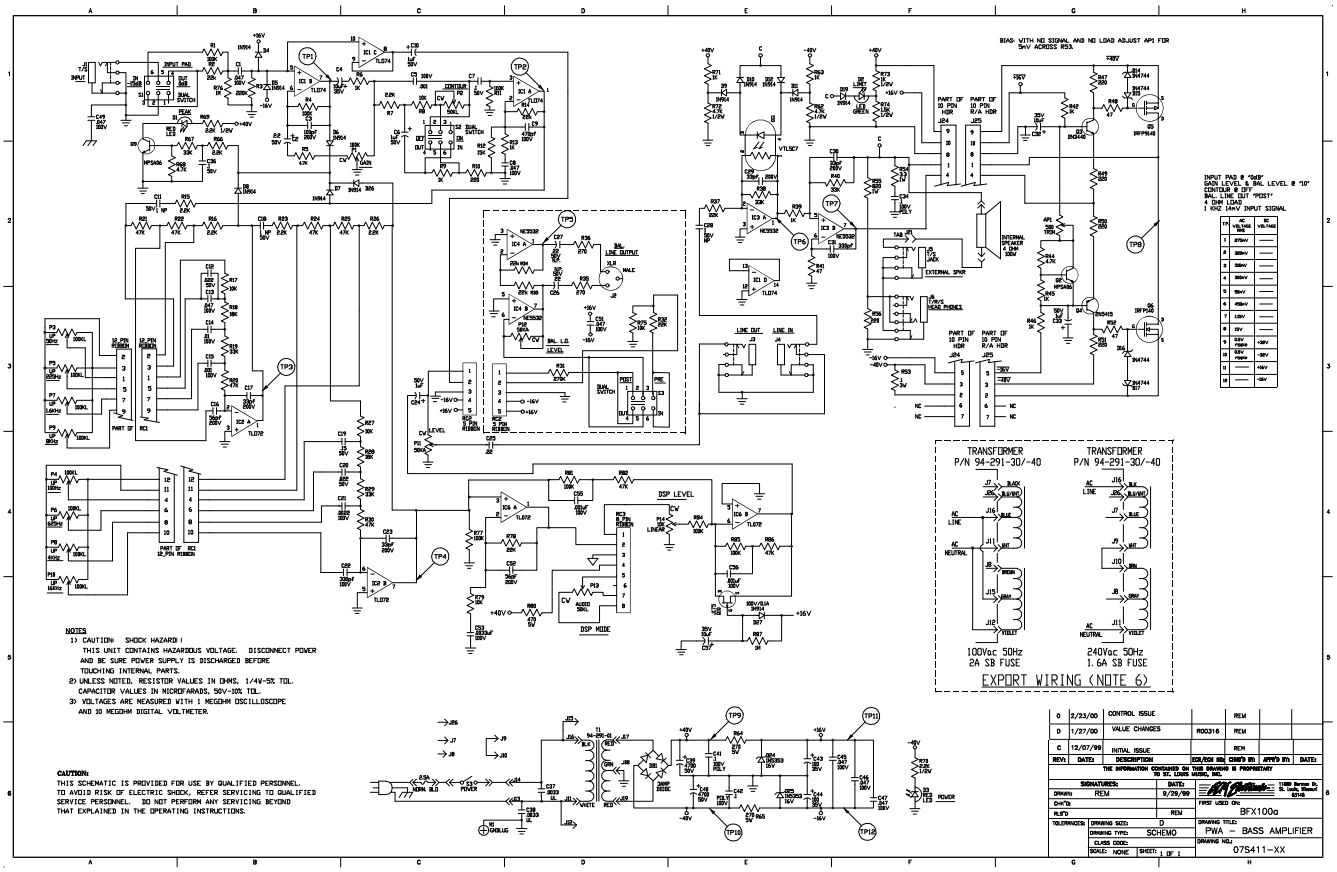
BIAS: WITH NO SIGNAL AND NO LOAD ADJUST AP1 FOR 5mV ACROSS R53.
INPUT PAD: 0 "0dB" GAIN LEVEL 1 BAL LEVEL 0 "10" GAIN LEVEL 10 BAL LEVEL 10 "PRESET"
4 OHM LOAD
1 KHZ 24mV INPUT SIGNAL
TRANSFORMER P/N 94-291-30/-40
TRANSFORMER P/N 94-291-30/-40
100Vac 50Hz 2A SB FUSE
240Vac 50Hz 1.6A SB FUSE
EXPORT WIRING (NOTE 6)
DSP LEVEL
DSP MODE
LINE OUT
LINE IN
EXTERNAL SPKR
EXTERNAL SPEAKER 4 OHM 30W
NOTES
1) CAUTION: SHOCK HAZARD!
THIS UNIT CONTAINS HAZARDOUS VOLTAGE. DISCONNECT POWER AND BE SURE POWER SUPPLY IS DISCHARGED BEFORE TOUCHING INTERNAL PARTS.
2) UNLESS NOTED, RESISTOR VALUES IN OHMS, 1/4W-5% TOL. CAPACITOR VALUES IN MICROFARADS, 50V-10% TOL.
3) VOLTAGES ARE MEASURED WITH 1 MEGOHM OSCILLOSCOPE AND 10 MEGOHM DIGITAL VOLTMETER.
CAUTION:
THIS SCHEMATIC IS PROVIDED FOR USE BY QUALIFIED PERSONNEL. TO AVOID RISK OF ELECTRIC SHOCK, REFER SERVICING TO QUALIFIED SERVICE PERSONNEL. DO NOT PERFORM ANY SERVICING BEYOND THAT EXPLAINED IN THE OPERATING INSTRUCTIONS.
0 2/23/00 CONTROL ISSUE REM
D 1/27/00 VALUE CHANGES R00316 REM
C 12/07/99 INITIAL ISSUE REM
REV: DATE: DESCRIPTION: ECR/ECN NO: CHK'D BY: APV'D BY: DATE:
THE INFORMATION CONTAINED ON THIS DRAWING IS PROPRIETARY TO ST. LOUIS MUSIC, INC.
SIGNATURES: DATE:
DRAWN: REM 9/29/99
CH'KD:
AUT'D: REM
TOLERANCES:
DRAWING SIZE: D
DRAWING TYPE: SCHEMO
CLASS CODE:
SCALE: NONE SHEET: 1 OF 1
FIRST USED ON: BFX100a
DRAWING TITLE: PWA - BASS AMPLIFIER
DRAWING NO.: 07S411-XX