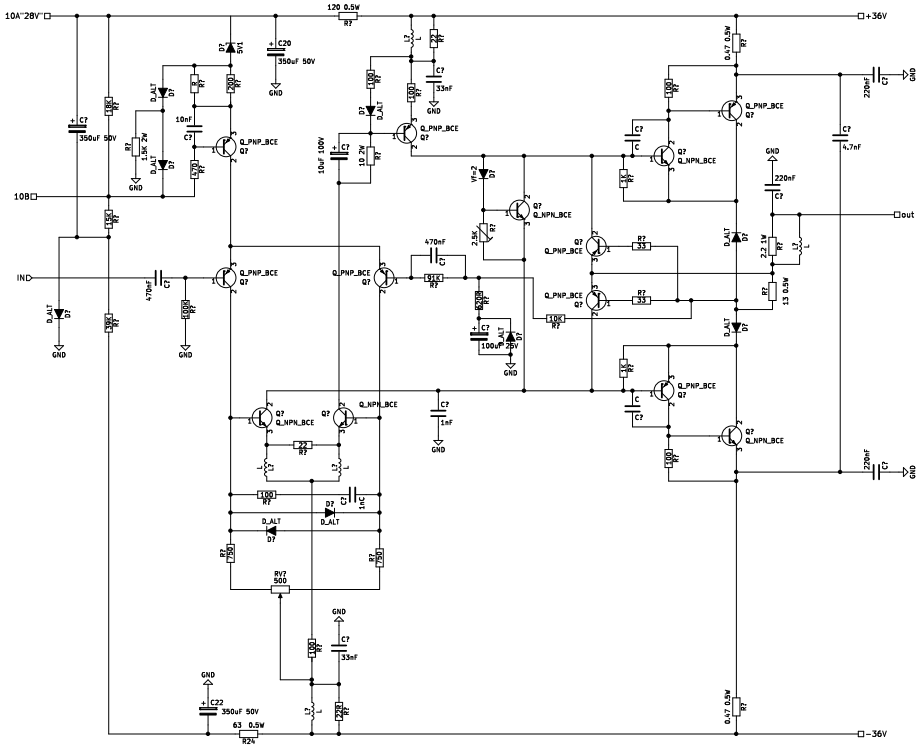
10A"28V"
10B
IN
+36V
-36V
out
GND
120 0.5W
350uF 50V
C20
10nF 100V
10 2W
470nF
100uF 25V
33nF
220nF
4.7nF
1nF
1nC
2.2 1W
13 0.5W
0.47 0.5W
63 0.5W
RV7 500
Q_PNP_BCE
Q_NPN_BCE
D_ALT
VR-2
2.5K

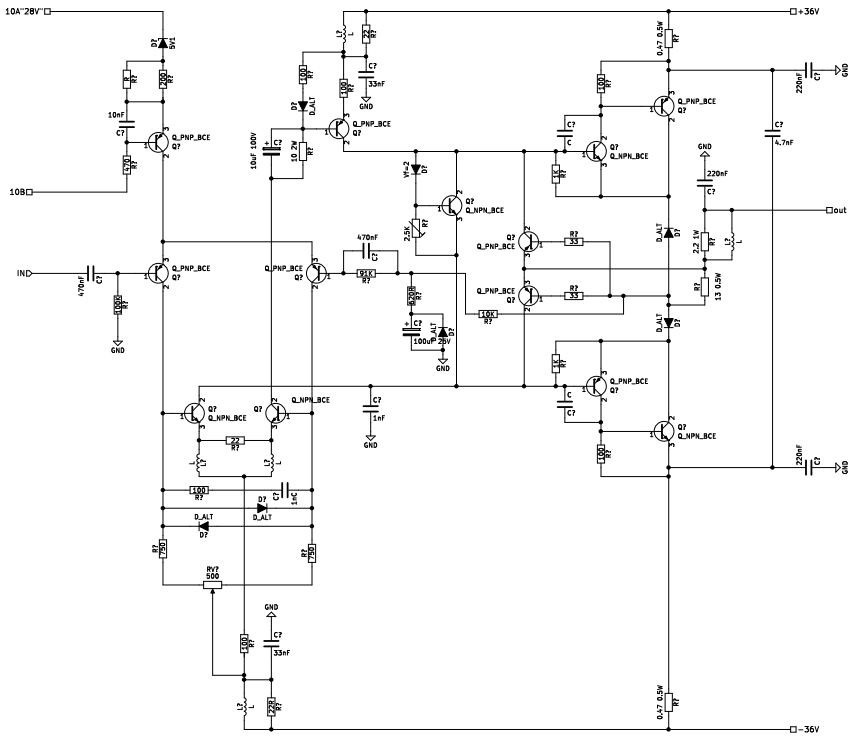
10A"28V"
10B
IN
+36V
-36V
out
GND
470nF
10nF 100V
10 2W
100uF 25V
33nF
220nF
4.7nF
1nF
1nC
2.2 1W
13 0.5W
0.47 0.5W
RV7 500
Q_PNP_BCE
Q_NPN_BCE
D_ALT
VR-2
2.5K