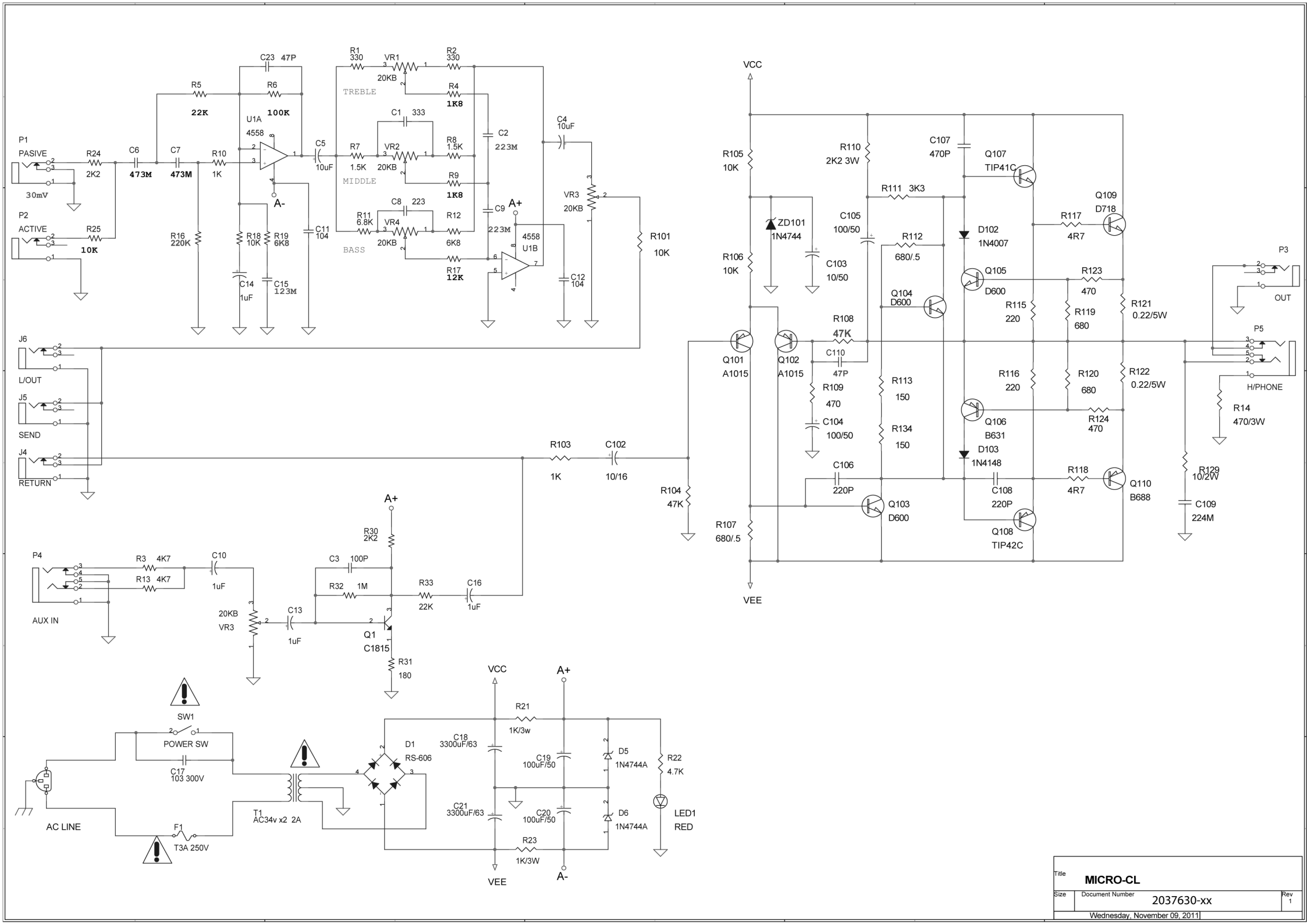

Title	MICRO-CL	
Size	Document Number 2037630-xx	Rev 1
	Wednesday, November 09, 2011	