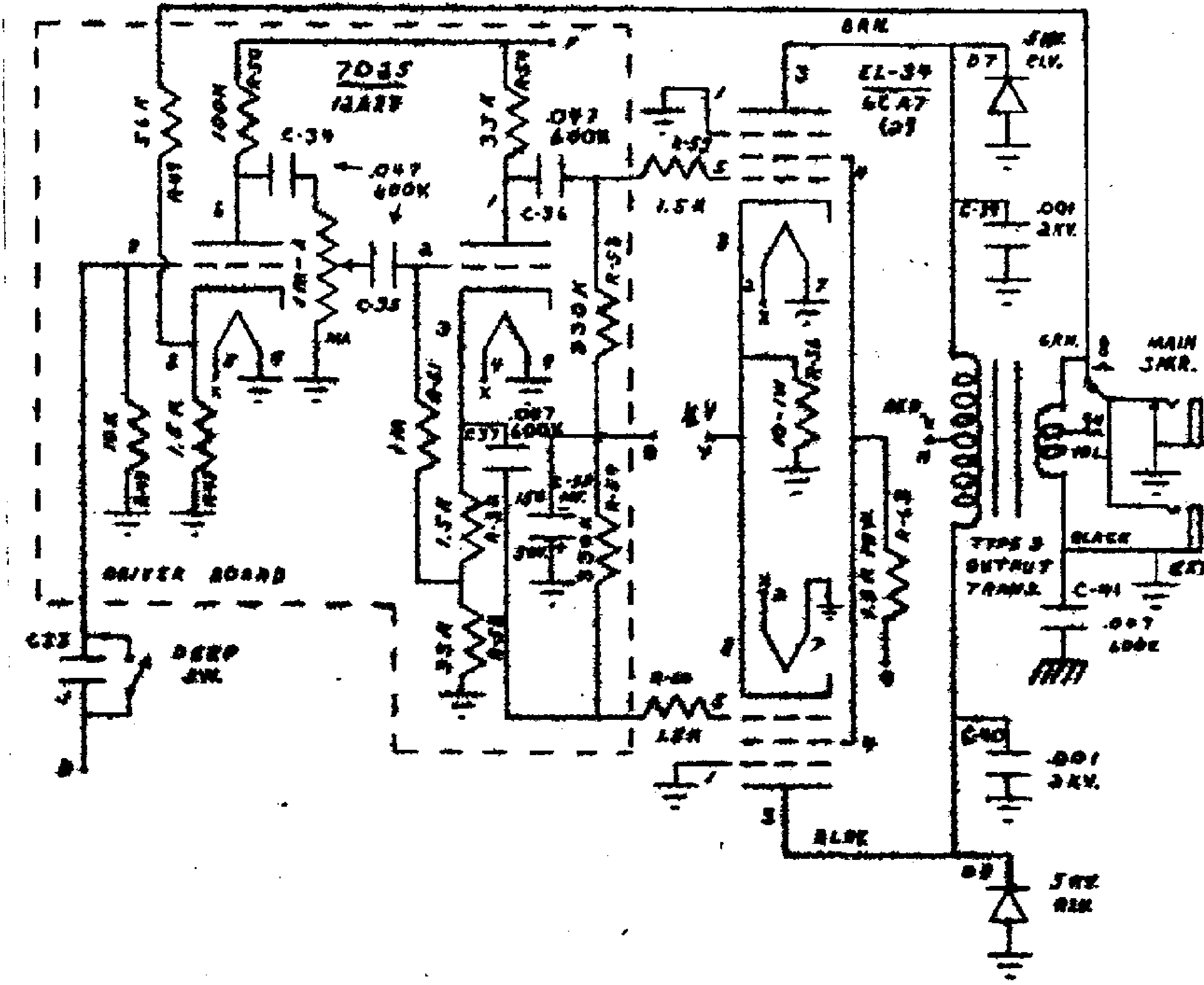

MUSIC MAN, INC. ANAHEIM, CALIFORNIA