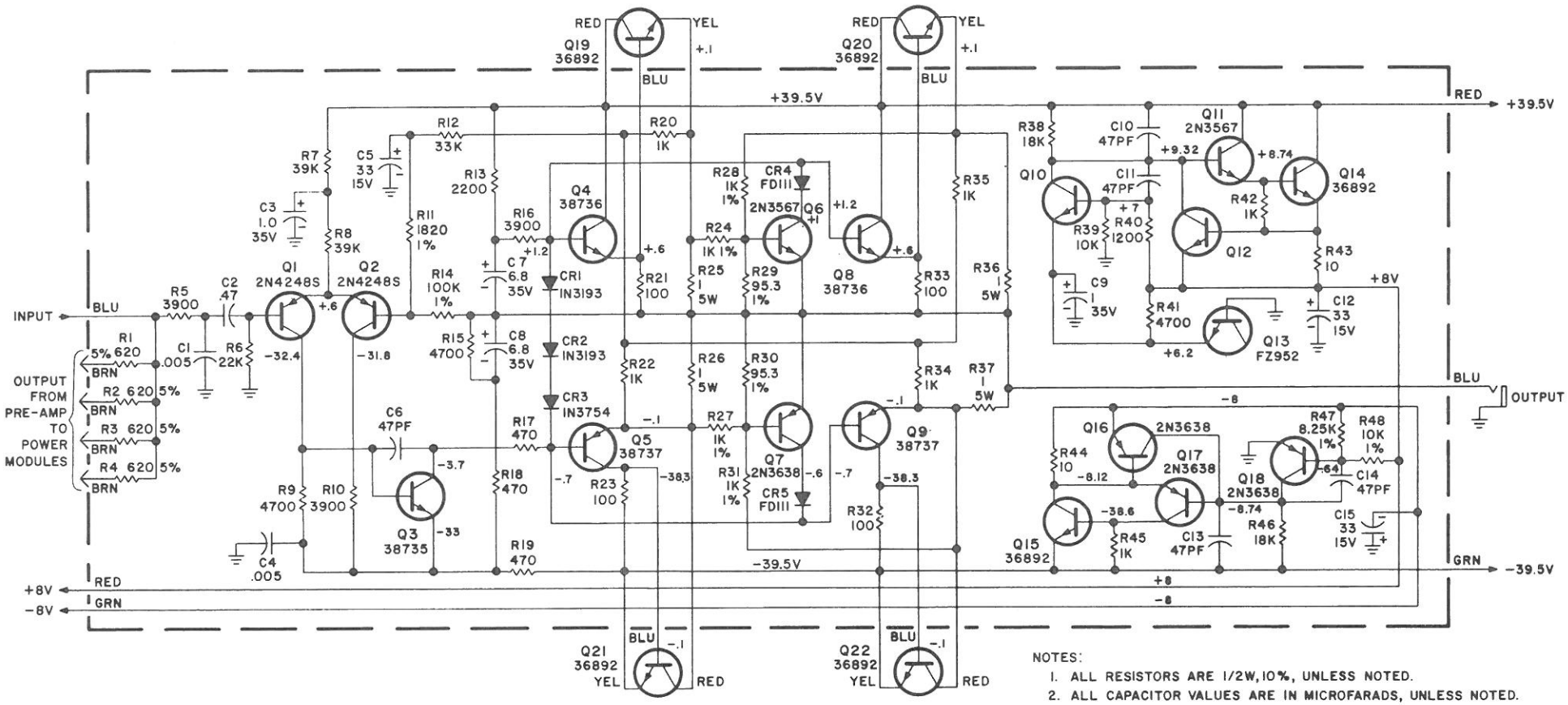

NOTES:

1. ALL RESISTORS ARE 1/2W, 10%, UNLESS NOTED.
2. ALL CAPACITOR VALUES ARE IN MICROFARADS, UNLESS NOTED.
3. ALL TRANSISTORS ARE PET8002 OR SE4002, UNLESS NOTED.
4. DIODE CR3 IS MOUNTED IN A CLIP ON THE CHASSIS.
5. TRANSISTORS Q19, Q20, Q21 & Q22 ARE MOUNTED IN A BRACKET ON THE CHASSIS.
6. VOLTAGES ARE WITH POWER ON, ALL CONTROLS FULL ON, NO SIGNAL, AND NO LOAD.

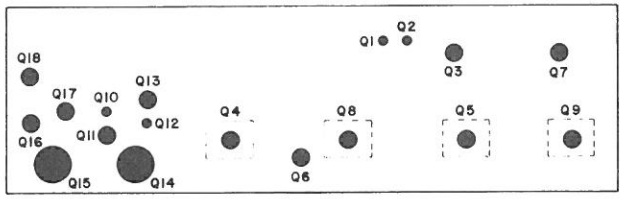

TRANSISTOR DIAGRAM

REV	C O NO	DATE	BY	PART NUMBER	DESCRIPTION	ITEM

Kustom ELECTRONICS, INC. CHANUTE, KAN. 66720

DRN SPAITS	DATE 2-70	TOLERANCES NONE	MATERIAL NONE
CHK	DATE	NAME POWER AMP, +8 – REG. PC5024	
ENGR			
SCALE NONE	SHT 1 OF 1	PART NUMBER 002-5024-00	