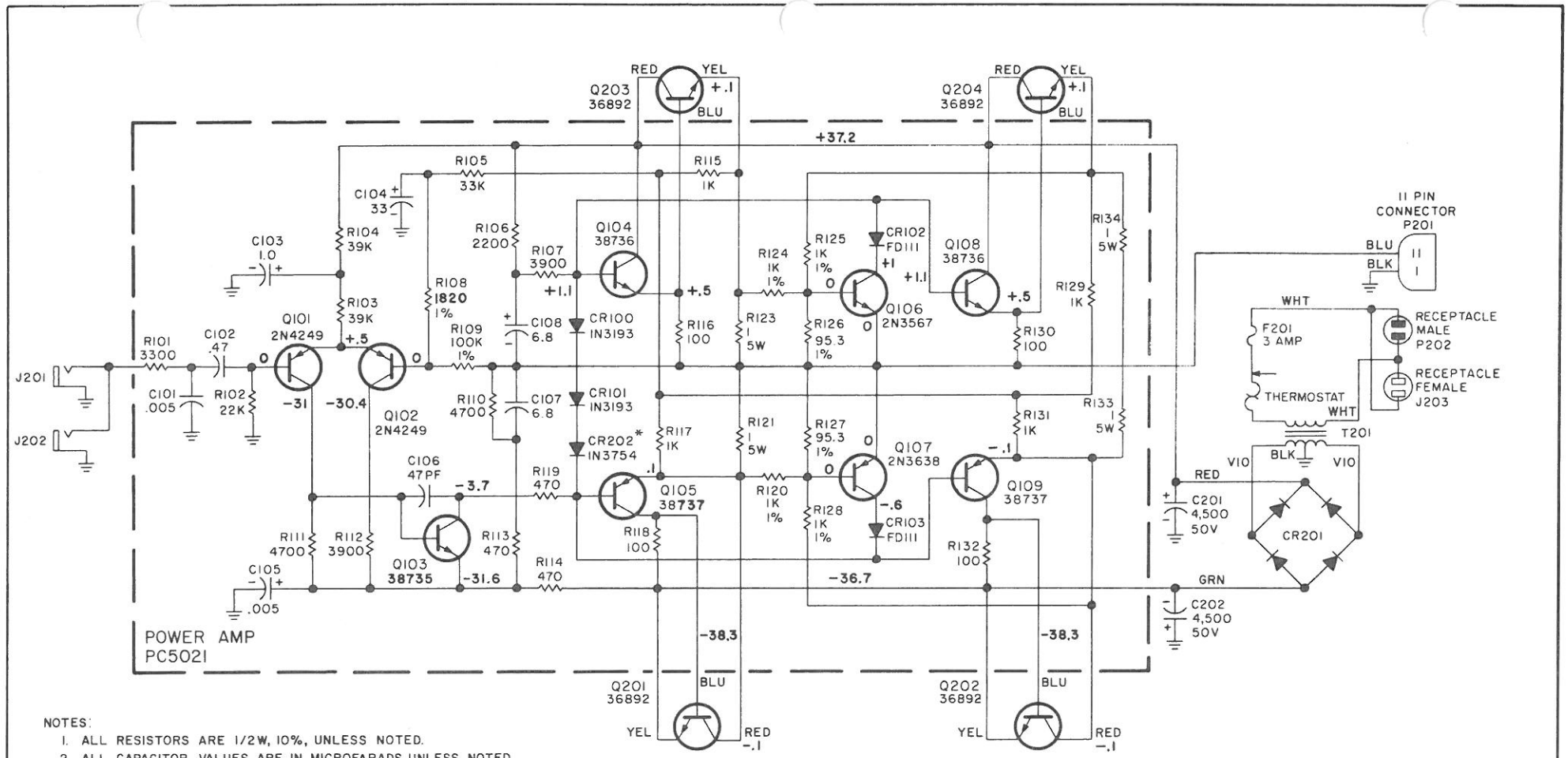

NOTES:

1. ALL RESISTORS ARE 1/2W, 10%, UNLESS NOTED.
2. ALL CAPACITOR VALUES ARE IN MICROFARADS, UNLESS NOTED.
* 3. DIODE CR202 IS MOUNTED IN A CLIP ON THE CHASSIS.
4. VOLTAGES ARE WITH POWER ON, ALL CONTROLS FULL ON, NO SIGNAL, NO LOAD AND MEASURED FROM COMMON GROUND.

TRANSISTOR DIAGRAM

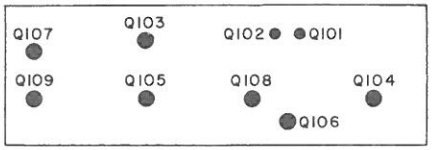

REV	C O NO	DATE	BY

REQ	PART NUMBER	DESCRIPTION	ITEM

Kustom ELECTRONICS, INC. CHANUTE, KAN. 66720

DRN SPAITS	DATE 1-70	TOLERANCES NONE	MATERIAL NONE
CHK BRG	DATE 1-70	NAME POWER MODULE W/ EXTERNAL RECEPTACLES.	
ENGR			
SCALE NONE	SHT 1 OF 1	PART NUMBER 002-0041-00	