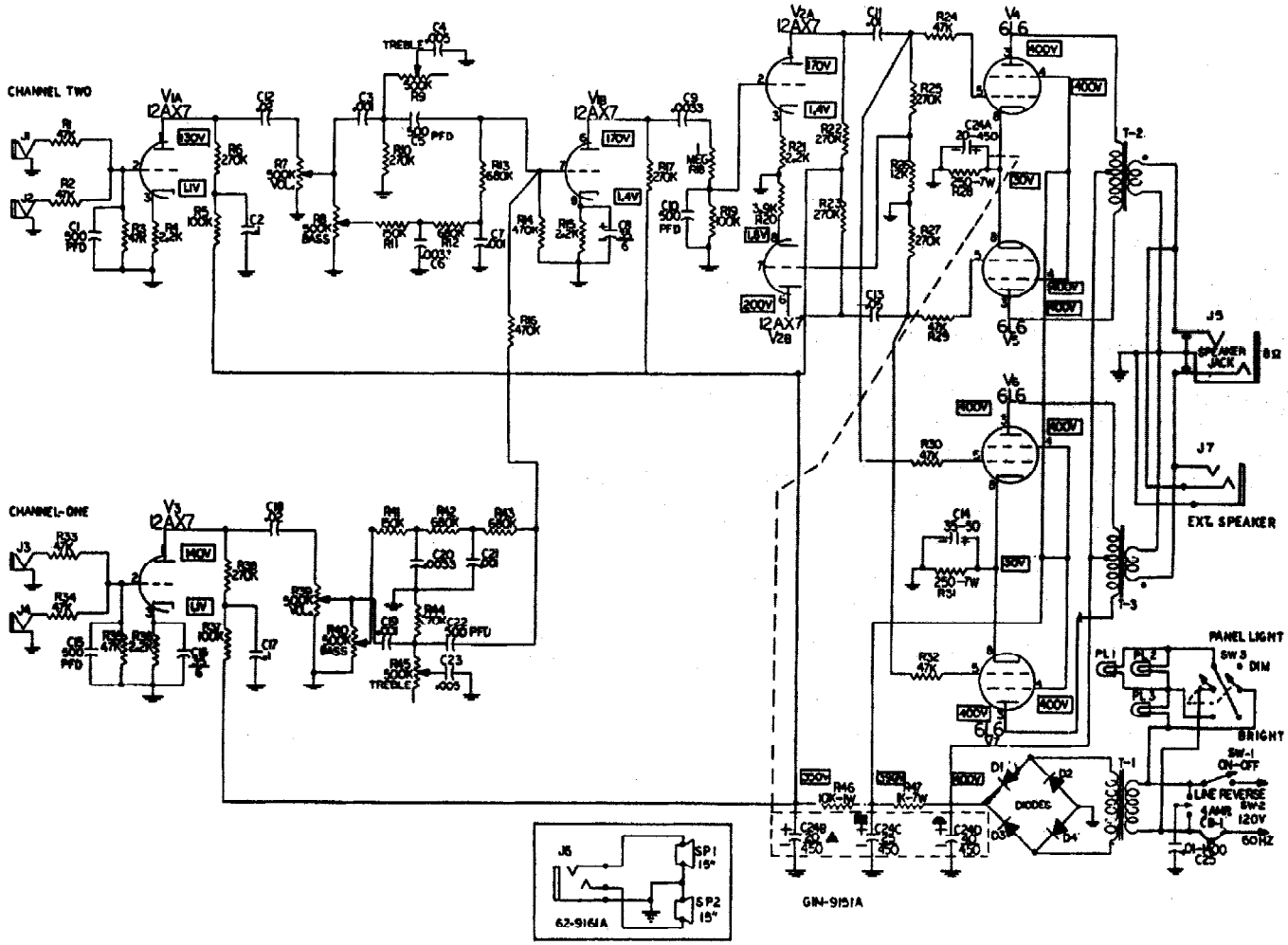

NOTE:
1. All resistors ½ watt 10% unless otherwise noted.
2. All capacitor values are in MFD unless otherwise noted.
3. D. C. Voltages measured with 20,000 Ohm/volt meter, with all controls set at minimum.

Wards Airline Model GIM 9151A