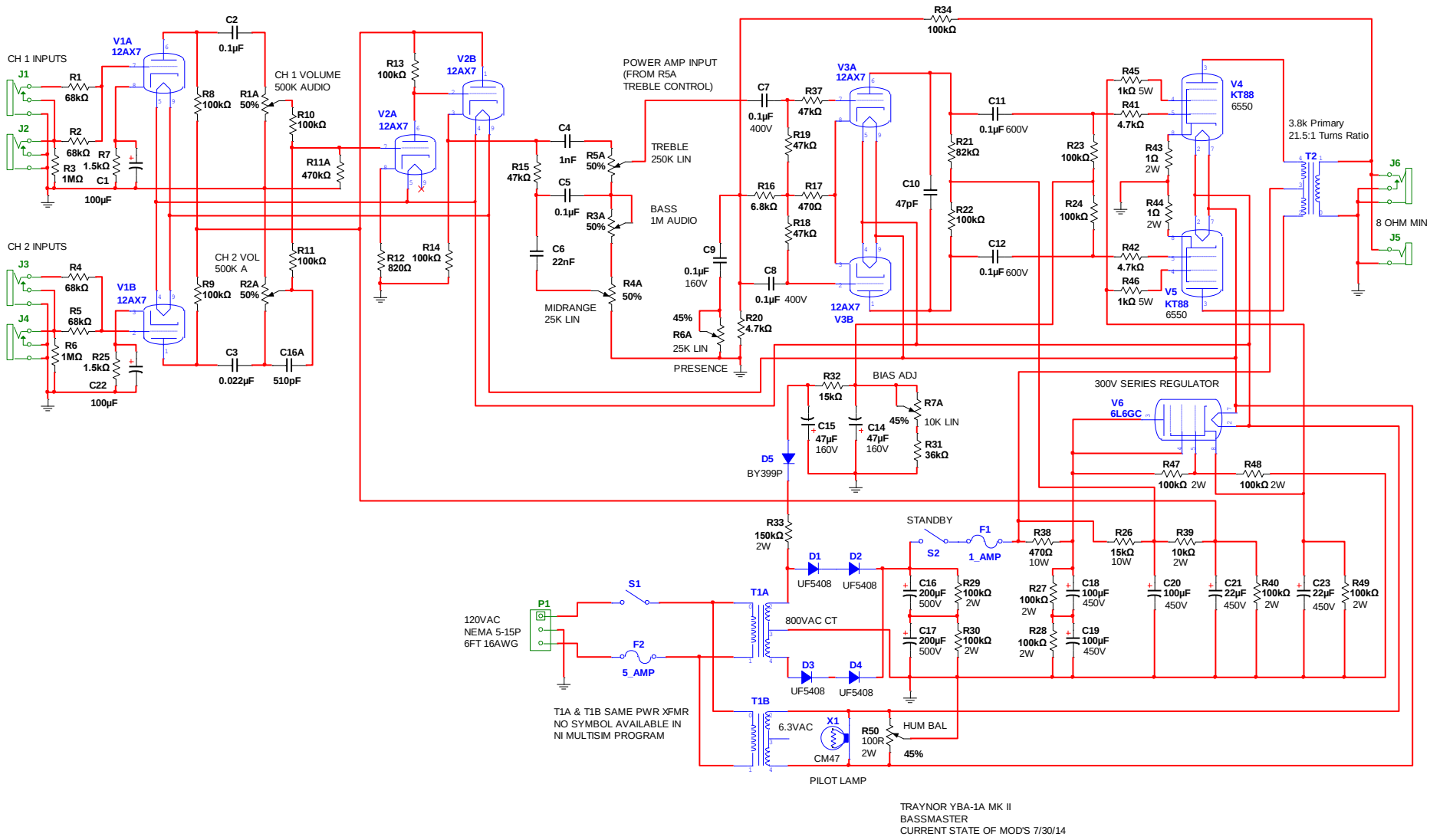

Traynor YBA-1A Mk II Bassmaster
Current state of revisions 7/31/14