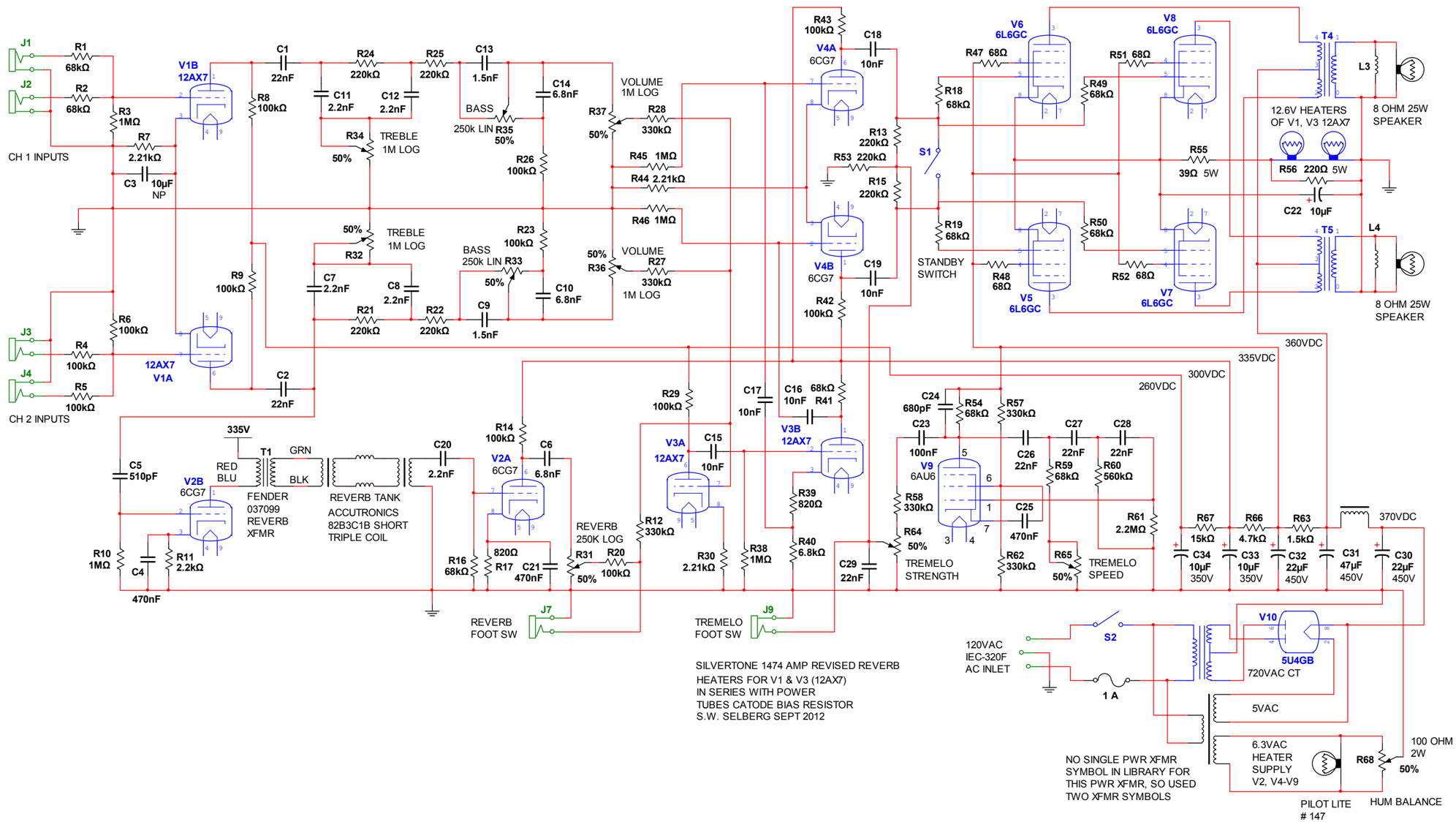
J1
J2
J3
J4
CH 1 INPUTS
CH 2 INPUTS
R1 68kΩ
R2 68kΩ
R3 1MΩ
R4 100kΩ
R5 100kΩ
R6 100kΩ
R7 2.21kΩ
C3 10µF NP
V1B 12AX7
V1A 12AX7
R8 100kΩ
R9 100kΩ
C1 22nF
C2 22nF
R24 220kΩ
R25 220kΩ
C11 2.2nF
C12 2.2nF
R34 50%
TREBLE 1M LOG
C7 2.2nF
C8 2.2nF
R21 220kΩ
R22 220kΩ
R32 50%
TREBLE 1M LOG
C13 1.5nF
BASS 250k LIN R35 50%
C14 6.8nF
R26 100kΩ
BASS 250k LIN R33 50%
C9 1.5nF
C10 6.8nF
R23 100kΩ
VOLUME 1M LOG
R37 50%
R28 330kΩ
R45 1MΩ
R44 2.21kΩ
R46 1MΩ
R36 50%
R27 330kΩ
VOLUME 1M LOG
R43 100kΩ
V4A 6CG7
C18 10nF
R13 220kΩ
R53 220kΩ
R15 220kΩ
S1
V4B 6CG7
C19 10nF
R42 100kΩ
R18 68kΩ
R19 68kΩ
STANDBY SWITCH
V6 6L6GC
V5 6L6GC
R47 68Ω
R48 68Ω
R49 68kΩ
R50 68kΩ
V8 6L6GC
V7 6L6GC
R51 68Ω
R52 68Ω
R55 39Ω 5W
R56 220Ω 5W
C22 10µF
12.6V HEATERS OF V1, V3 12AX7
T4
T5
L3
L4
8 OHM 25W SPEAKER
8 OHM 25W SPEAKER
360VDC
335VDC
300VDC
260VDC
370VDC
335V
T1
RED BLU
GRN
BLK
FENDER 037099 REVERB XFMR
REVERB TANK ACCUTRONICS 82B3C1B SHORT TRIPLE COIL
C5 510pF
V2B 6CG7
R10 1MΩ
C4 470nF
R11 2.2kΩ
C20 2.2nF
R14 100kΩ
V2A 6CG7
C6 6.8nF
R16 68kΩ
R17 820Ω
C21 470nF
REVERB 250K LOG
R31 50%
R20 100kΩ
J7
REVERB FOOT SW
R29 100kΩ
V3A 12AX7
C15 10nF
R12 330kΩ
R30 2.21kΩ
C17 10nF
R38 1MΩ
C16 10nF
R41 68kΩ
V3B 12AX7
R39 820Ω
R40 6.8kΩ
C29 22nF
J9
TREMELO FOOT SW
C24 680pF
C23 100nF
V9 6AU6
R58 330kΩ
R64 50%
TREMELO STRENGTH
R54 68kΩ
R57 330kΩ
C26 22nF
C27 22nF
C28 22nF
R59 68kΩ
R60 560kΩ
C25 470nF
R62 330kΩ
R65 50%
TREMELO SPEED
R61 2.2MΩ
R67 15kΩ
R66 4.7kΩ
R63 1.5kΩ
C34 10µF 350V
C33 10µF 350V
C32 22µF 450V
C31 47µF 450V
C30 22µF 450V
120VAC IEC-320F AC INLET
S2
1 A
V10 5U4GB
720VAC CT
5VAC
6.3VAC HEATER SUPPLY V2, V4-V9
R68 100 OHM 2W 50%
HUM BALANCE
PILOT LITE # 147
NO SINGLE PWR XFMR SYMBOL IN LIBRARY FOR THIS PWR XFMR, SO USED TWO XFMR SYMBOLS
SILVERTONE 1474 AMP REVISED REVERB
HEATERS FOR V1 & V3 (12AX7)
IN SERIES WITH POWER
TUBES CATODE BIAS RESISTOR
S.W. SELBERG SEPT 2012