REVISION RECORD			
LTR	ECO NO:	APPROVED:	DATE:

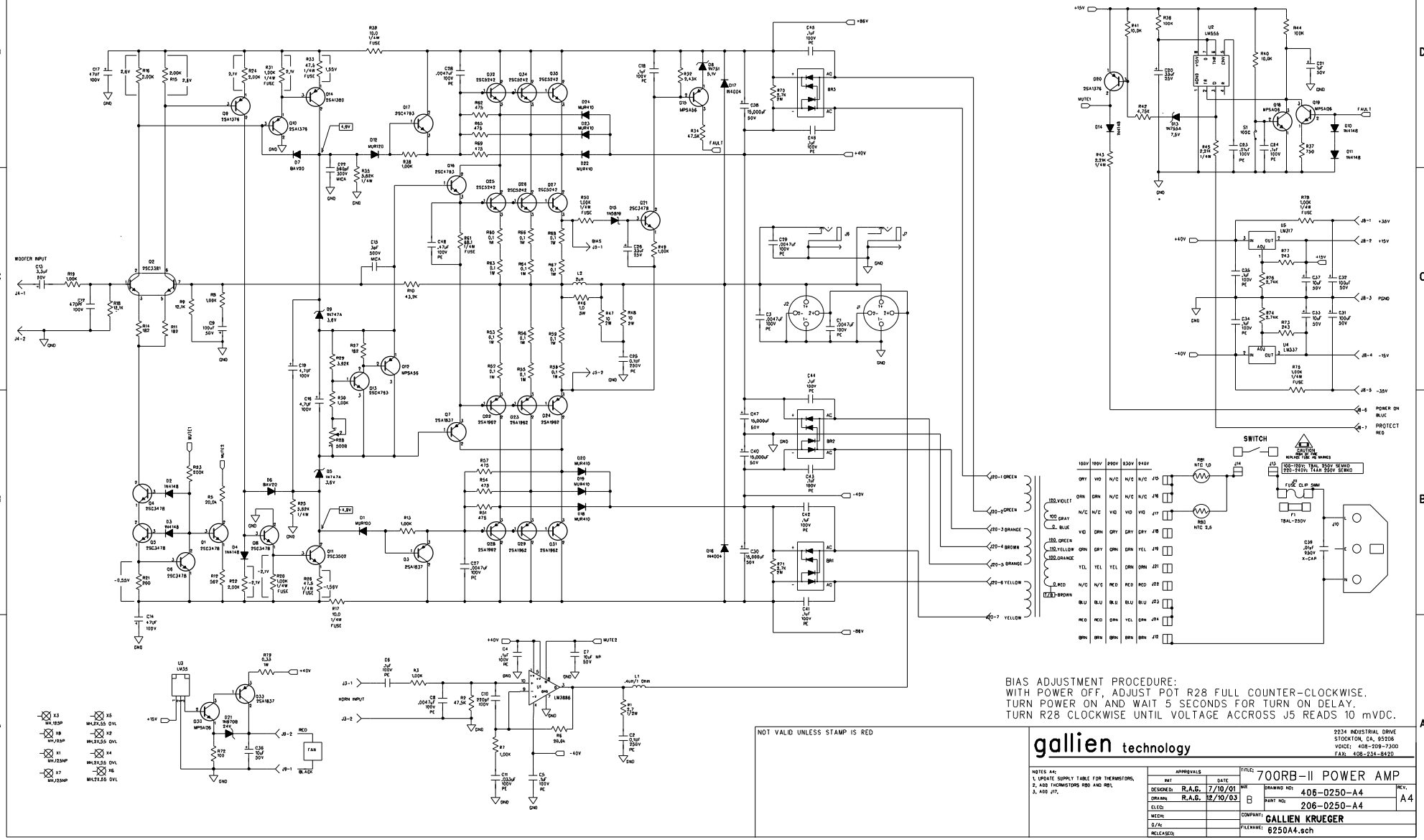

NOT VALID UNLESS STAMP IS RED

gallien technology
2234 INDUSTRIAL DRIVE
STOCKTON, CA, 95206
VOICE: 408-209-7300
FAX: 408-234-8420

NOTES A4:
1. UPDATE SUPPLY TABLE FOR THERMISTORS,
2. ADD THERMISTORS RB0 AND RB1,
3. ADD J17.

APPROVALS		
	INIT	DATE
DESIGNED:	R.A.G.	7/10/01
DRAWN:	R.A.G.	12/10/03
ELEC:		
MECH:		
Q/A:		
RELEASED:		

TITLE: 700RB-II POWER AMP

SIZE	DRAWING NO:	REV.
B	406-0250-A4	A4
	PART NO: 206-0250-A4	

COMPANY: GALLIEN KRUEGER

FILENAME: 6250A4.sch