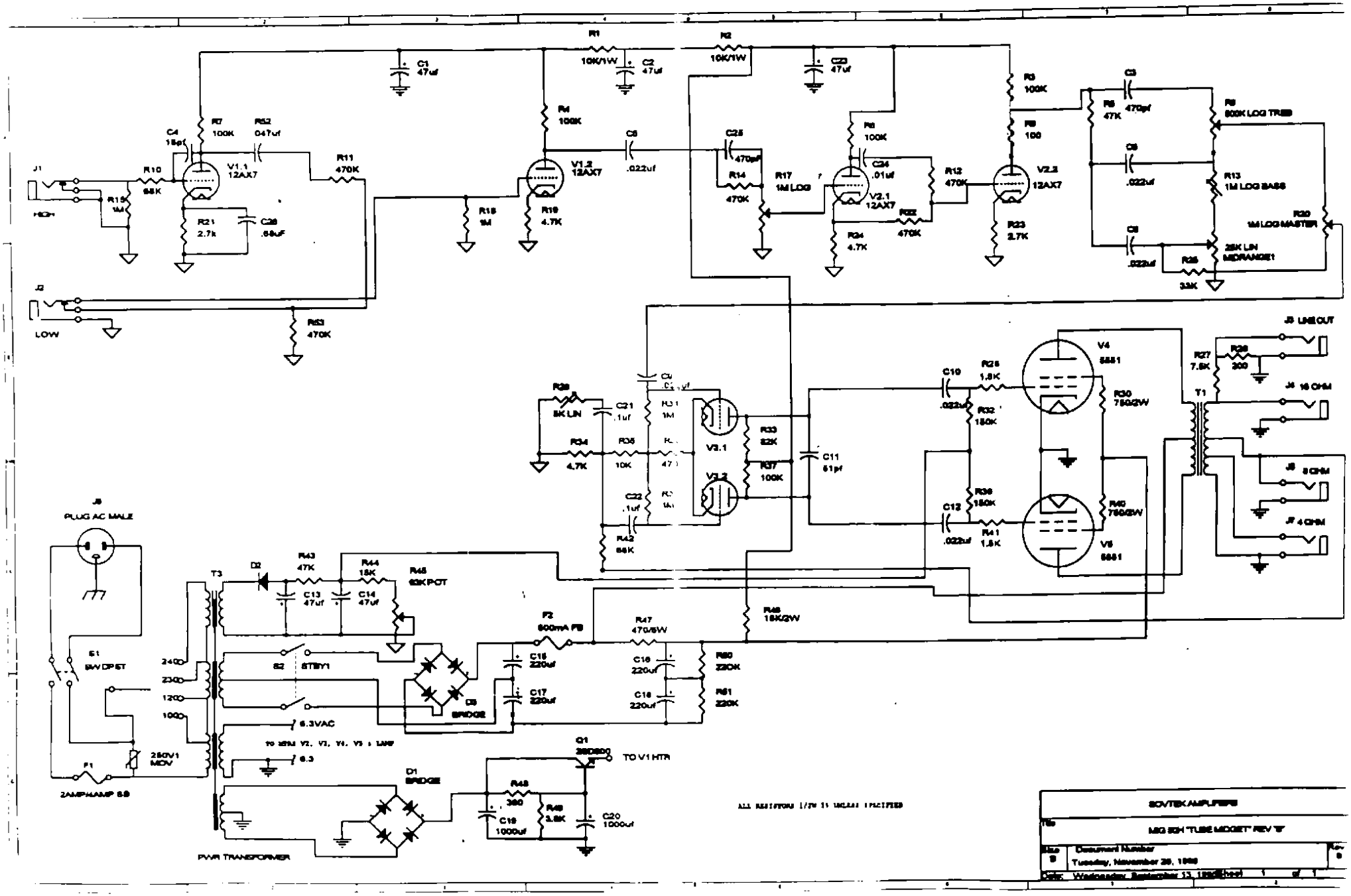
J1
HIGH
J2
LOW
R10
68K
R15
1M
C4
18pf
R7
100K
R52
.047uf
V1.1
12AX7
R21
2.7k
C26
.68uF
R11
470K
R53
470K
C1
47uf
R1
10K/1W
C2
47uf
R4
100K
R18
1M
V1.2
12AX7
R19
4.7K
C6
.022uf
C25
470pf
R14
470K
R17
1M LOG
C23
47uf
R6
100K
C24
.01uf
V2.1
12AX7
R24
4.7K
R22
470K
R12
470K
R2
10K/1W
R3
100K
R9
100
V2.2
12AX7
R23
2.7K
C3
R8
47K
470pf
C5
.022uf
C8
.022uf
R26
33K
R0
500K LOG TREB
R13
1M LOG BASS
R20
1M LOG MASTER
25K LIN
MIDRANGE1
R28
5K LIN
C21
.1uf
R34
4.7K
R35
10K
C22
.1uf
R42
68K
R31
1M
V3.1
V3.2
R33
82K
R37
100K
C11
51pf
C10
.022uf
R25
1.8K
R32
150K
C12
.022uf
R36
150K
R41
1.5K
V4
6551
V6
6551
R30
750/2W
R40
750/2W
R27
7.5K
R29
300
T1
J5 LINE OUT
J4 16 OHM
J3 8 OHM
J7 4 OHM
J6
PLUG AC MALE
S1
8A DPST
F1
ZAMPHAMP 5.0
250V1
MOV
T3
240
230
120
100
D2
R43
47K
R44
18K
R45
50K POT
C13
47uf
C14
47uf
S2
STBY1
6.3VAC
6.3
D3
BRIDGE
F2
500mA FB
C15
220uf
C17
220uf
R47
470/5W
C16
220uf
C18
220uf
R50
220K
R51
220K
R46
18K/2W
D1
BRIDGE
Q1
2N3055
TO V1 HTR
R48
360
R49
3.9K
C19
1000uf
C20
1000uf
PWR TRANSFORMER
SOVTEK AMPLIFIERS
MIG 50H "TUBE MIDGET" REV "B"
Document Number
Tuesday, November 26, 1996