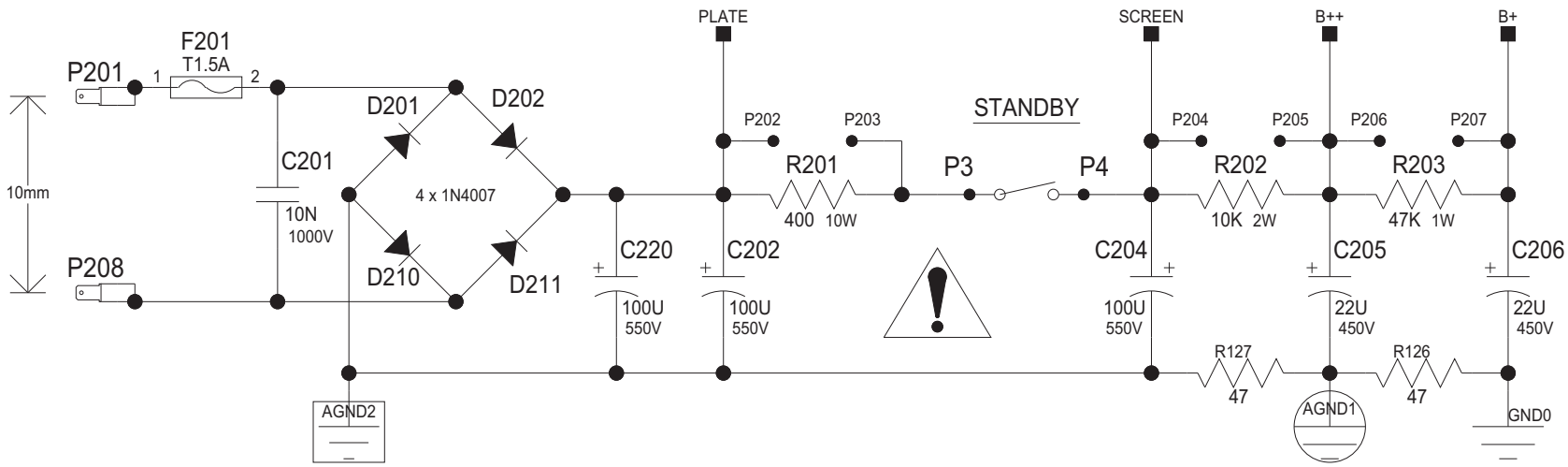

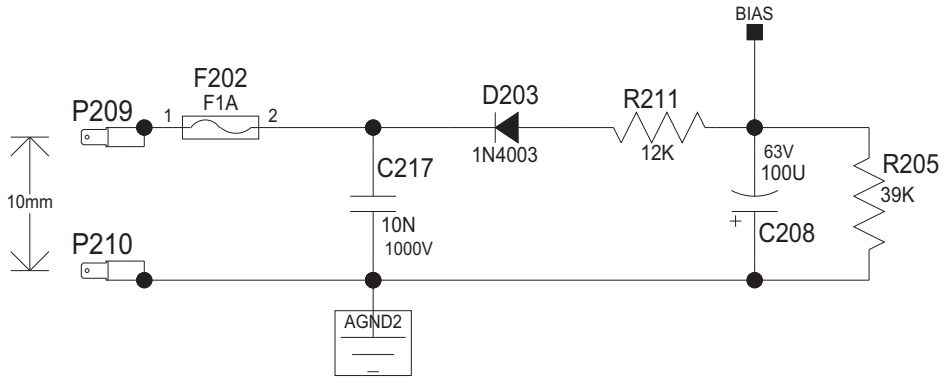

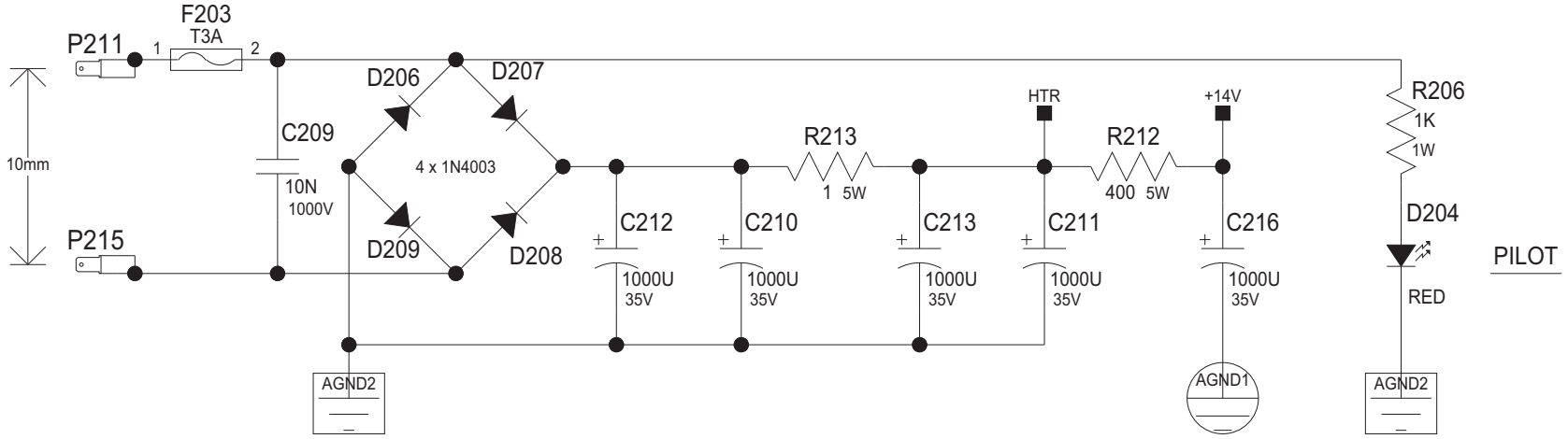

*Company Proprietary

Peavey Electro
P. O. Box 28
Meridian, MS 39

Product: VALVE KING

Title: COVER / POWE