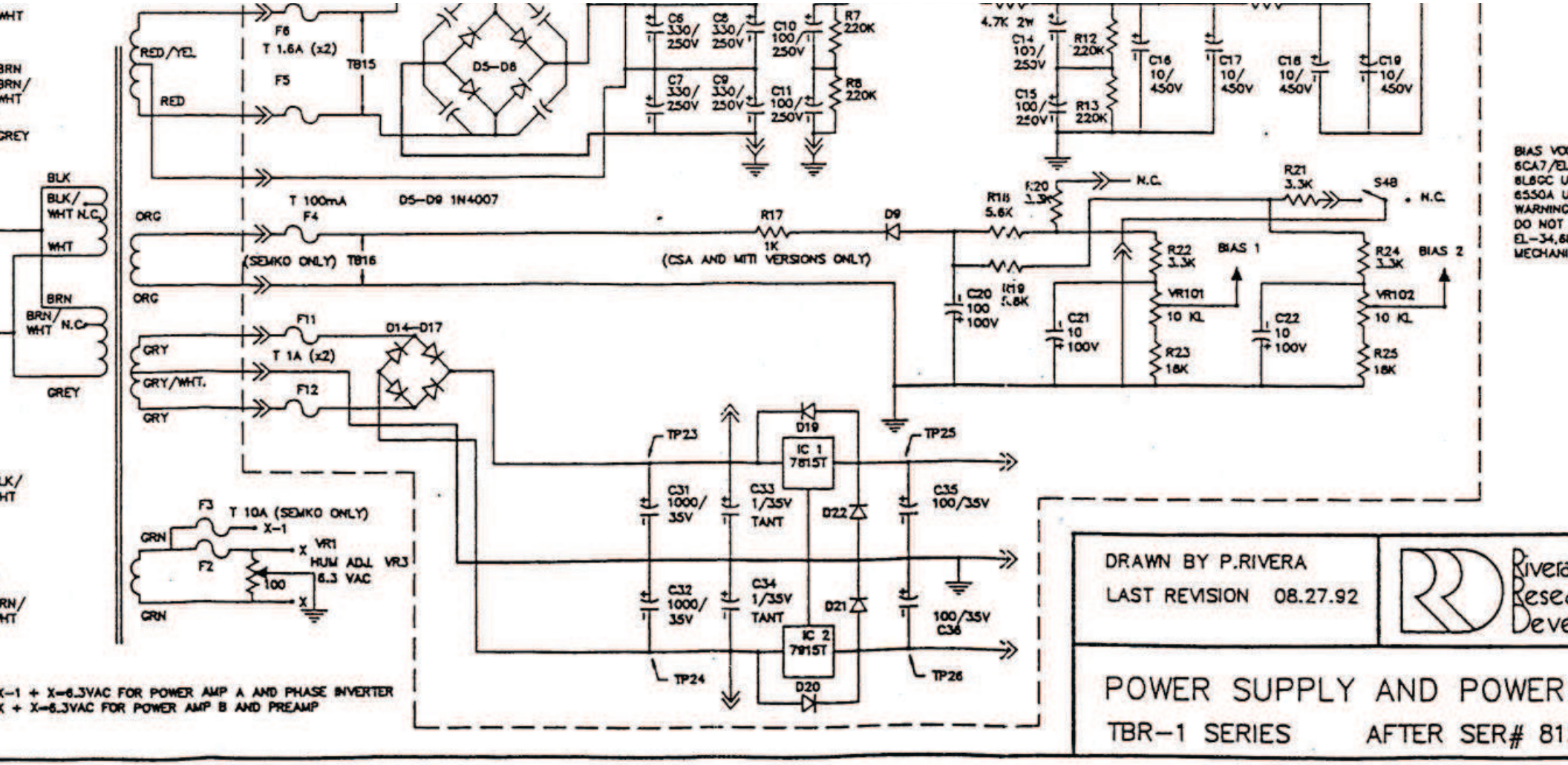

WHT
BRN
BRN/
WHT
GREY
BLK
BLK/
WHT N.C.
WHT
BRN
BRN/
WHT N.C.
GREY
RED/YEL
RED
F6
T 1.6A (x2)
F5
TB15
D5-D8
C6 330/ 250V
C8 330/ 250V
C10 100/ 250V
R7 220K
C7 330/ 250V
C9 330/ 250V
C11 100/ 250V
R8 220K
4.7K 2W
C14 100/ 250V
R12 220K
C16 10/ 450V
C17 10/ 450V
C18 10/ 450V
C19 10/ 450V
C15 100/ 250V
R13 220K
ORG
T 100mA
F4
D5-D9 1N4007
(SEMKO ONLY)
TB16
R17
1K
(CSA AND MITI VERSIONS ONLY)
D9
R18 5.6K
R20 3.3K
N.C.
R21 3.3K
S48
N.C.
R22 3.3K
BIAS 1
R24 3.3K
BIAS 2
C20 100 100V
R19 5.6K
C21 10 100V
VR101 10 KL
R23 18K
C22 10 100V
VR102 10 KL
R25 18K
GRY
GRY/WHT.
GRY
F11
T 1A (x2)
F12
D14-D17
TP23
D19
IC 1 7815T
TP25
C31 1000/ 35V
C33 1/35V TANT
D22
C35 100/35V
F3
T 10A (SEMKO ONLY)
X-1
GRN
F2
VR1 HUM ADJ. VR3 6.3 VAC
100
GRN
C32 1000/ 35V
C34 1/35V TANT
D21
100/35V C36
IC 2 7915T
TP24
D20
TP26
X-1 + X=6.3VAC FOR POWER AMP A AND PHASE INVERTER
X + X=6.3VAC FOR POWER AMP B AND PREAMP
DRAWN BY P.RIVERA
LAST REVISION 08.27.92
Rivera Resea Deve
POWER SUPPLY AND POWER
TBR-1 SERIES AFTER SER# 81