POWER AMP SCHEMATIC DIAGRAM

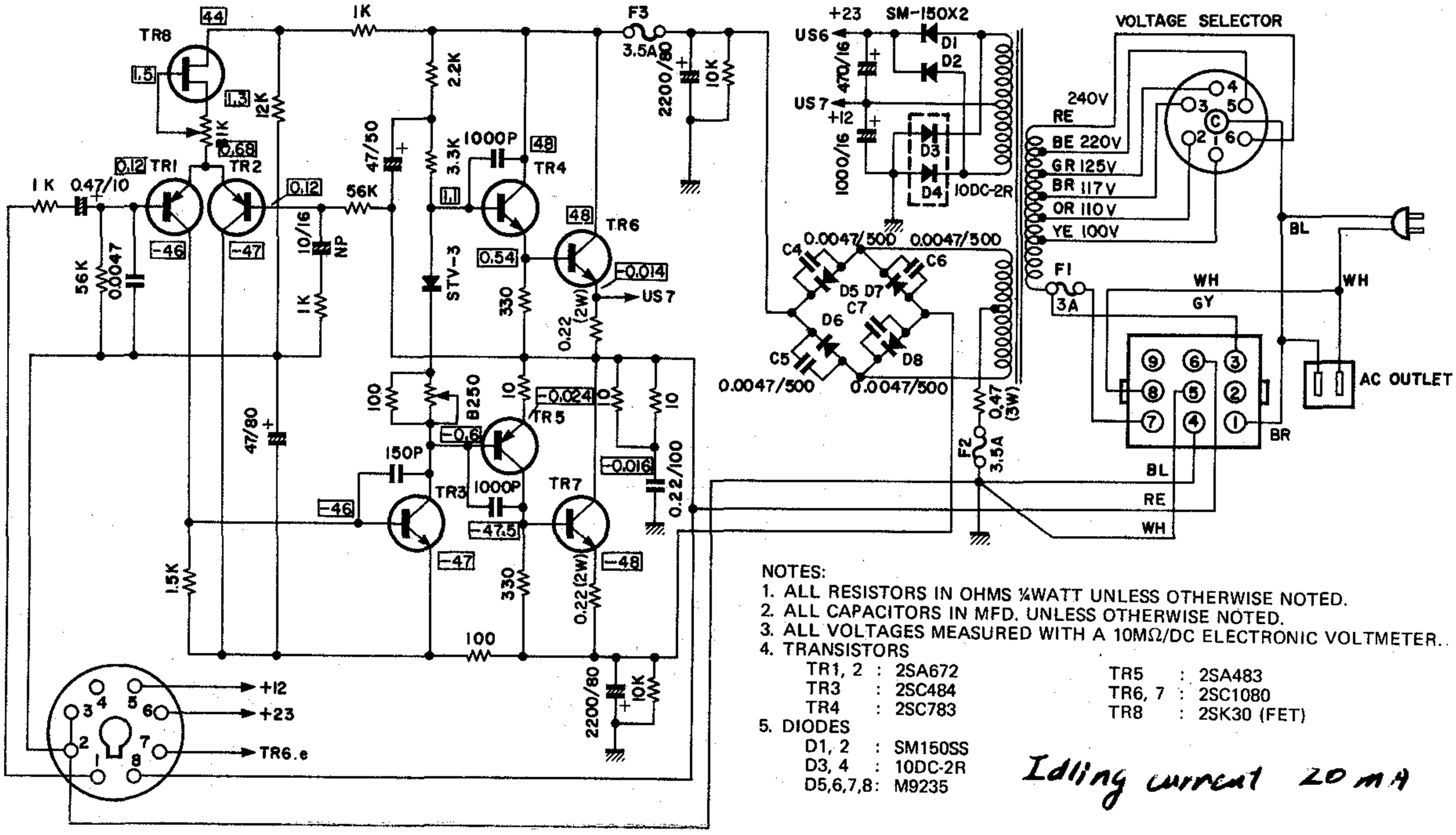

NOTES:

1. ALL RESISTORS IN OHMS ¼WATT UNLESS OTHERWISE NOTED.
2. ALL CAPACITORS IN MFD. UNLESS OTHERWISE NOTED.
3. ALL VOLTAGES MEASURED WITH A 10MΩ/DC ELECTRONIC VOLTMETER.
4. TRANSISTORS
   - TR1, 2 : 2SA672
   - TR3 : 2SC484
   - TR4 : 2SC783
   - TR5 : 2SA483
   - TR6, 7 : 2SC1080
   - TR8 : 2SK30 (FET)
5. DIODES
   - D1, 2 : SM150SS
   - D3, 4 : 10DC-2R
   - D5,6,7,8: M9235

Idling current 20 mA