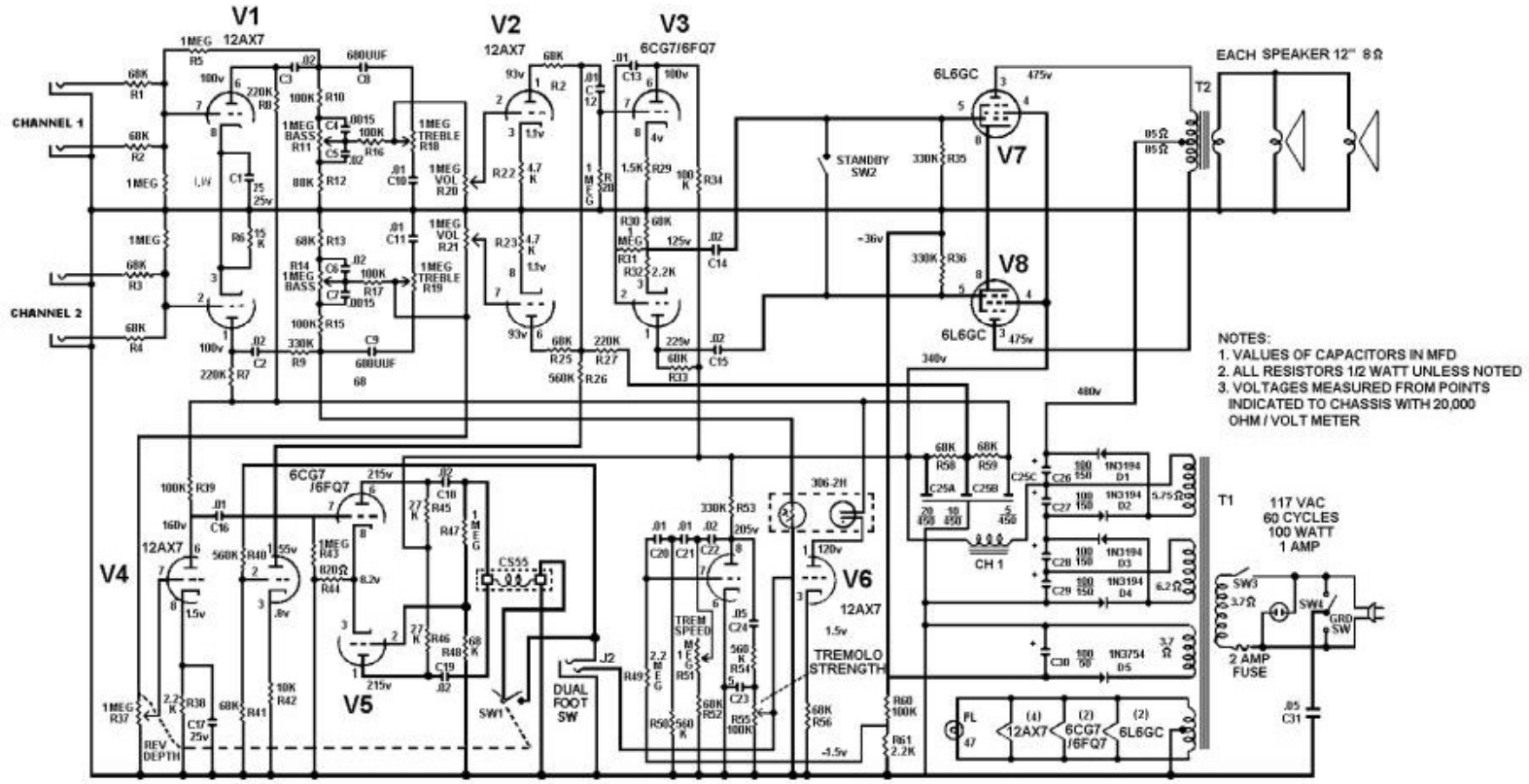

SCHEMATIC DIAGRAM OF SILVERTONE CHASSIS 185.11040 MODEL 1484