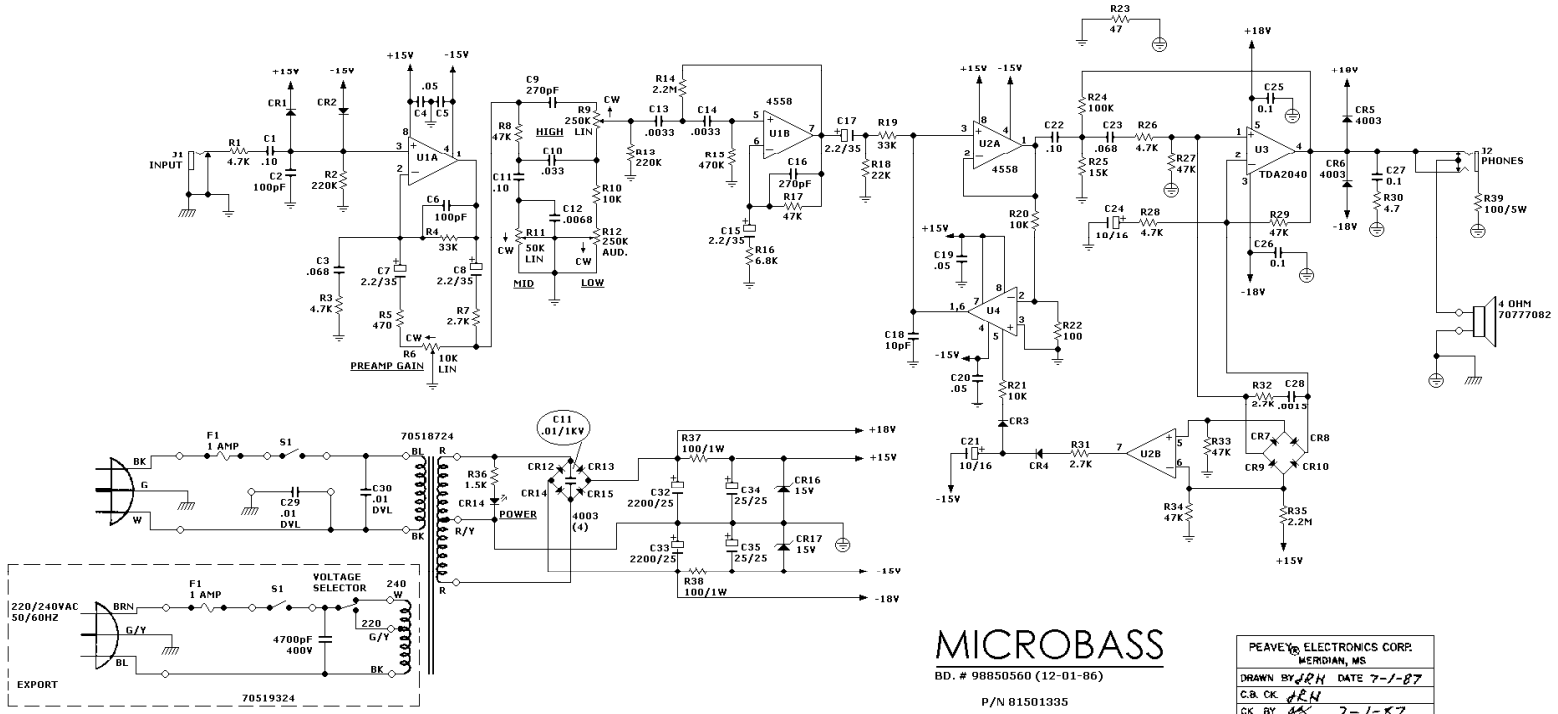

MICROBASS

BD. # 98850560 (12-01-86)

P/N 81501335

COPYRIGHT 1987

PEAVEY® ELECTRONICS CORP. MERIDIAN, MS.	
DRAWN BY JRH	DATE 7-1-87
C.B. CK. JRH	
CK. BY [illegible]	7-1-87
APPR. BY JCB	7-2-87