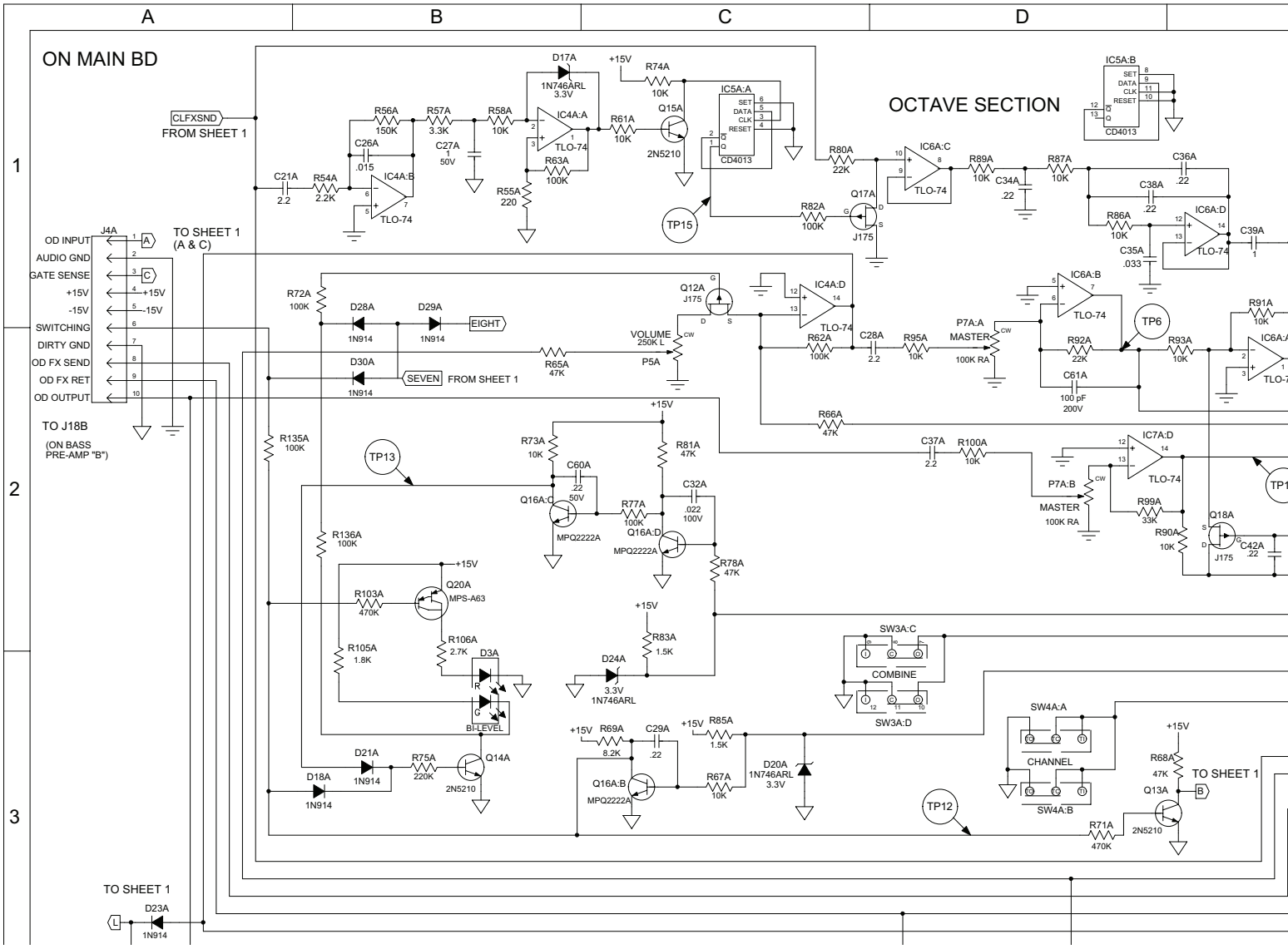
A
B
C
D
1
2
3
ON MAIN BD
OCTAVE SECTION
CLFXSND
FROM SHEET 1
TO SHEET 1
(A & C)
J4A
OD INPUT
AUDIO GND
GATE SENSE
+15V
-15V
SWITCHING
DIRTY GND
OD FX SEND
OD FX RET
OD OUTPUT
TO J18B
(ON BASS
PRE-AMP "B")
EIGHT
SEVEN
FROM SHEET 1
TP15
TP6
TP13
TP12
TO SHEET 1
D23A
1N914
COMBINE
CHANNEL
BI-LEVEL
CD4013
TLO-74
MPQ2222A
MPS-A63
2N5210
J175
MASTER
100K RA
VOLUME
250K L
P5A