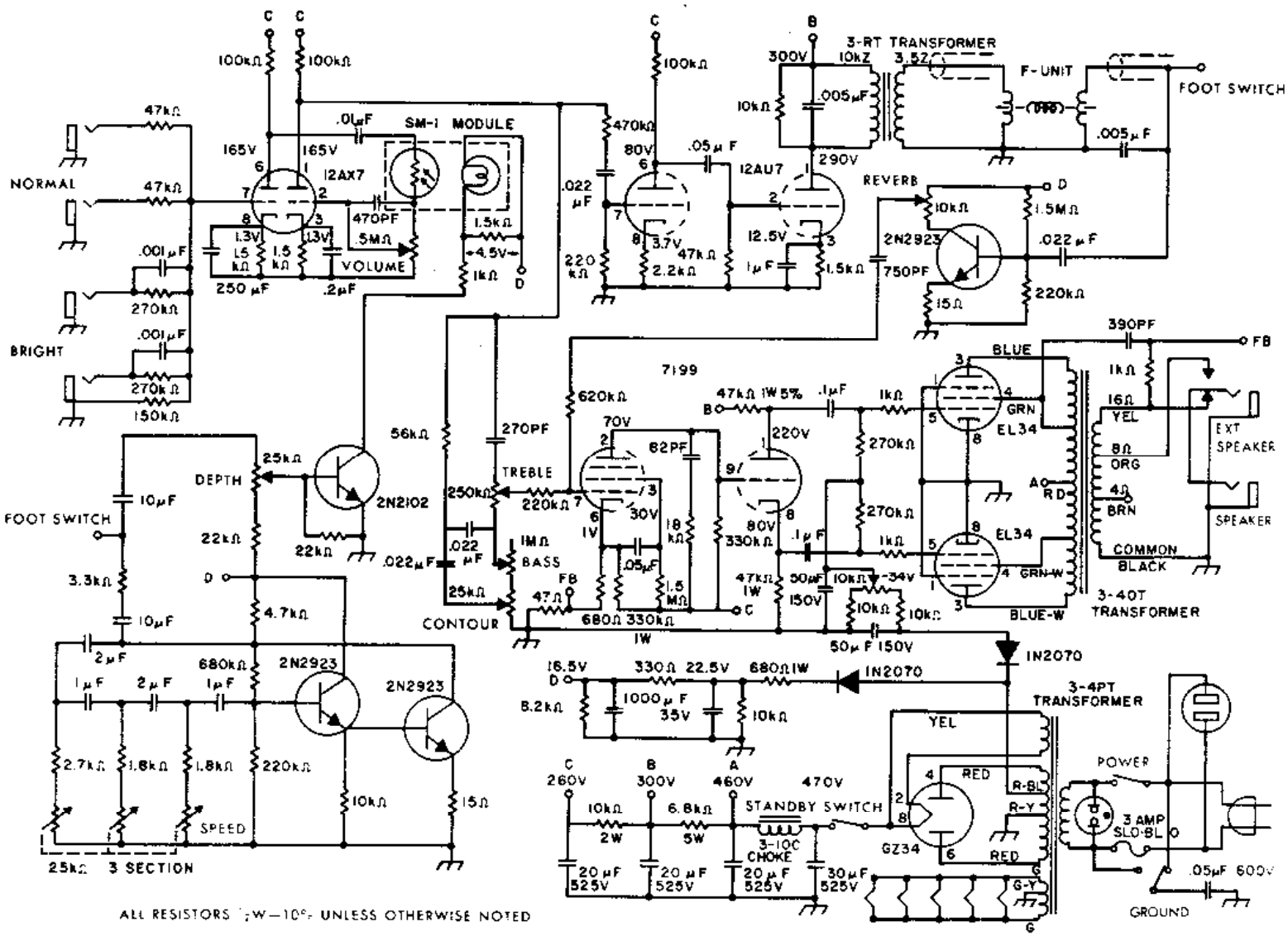
NORMAL
BRIGHT
FOOT SWITCH
12AX7
SM-1 MODULE
VOLUME
12AU7
REVERB
2N2923
3-RT TRANSFORMER
F-UNIT
FOOT SWITCH
7199
EL34
EL34
3-40T TRANSFORMER
EXT SPEAKER
SPEAKER
COMMON BLACK
2N2102
DEPTH
TREBLE
BASS
CONTOUR
2N2923
2N2923
SPEED
25kΩ 3 SECTION
1N2070
1N2070
3-4PT TRANSFORMER
GZ34
STANDBY SWITCH
3-10C CHOKE
POWER
3 AMP SLO-BL
GROUND
ALL RESISTORS ½W—10% UNLESS OTHERWISE NOTED