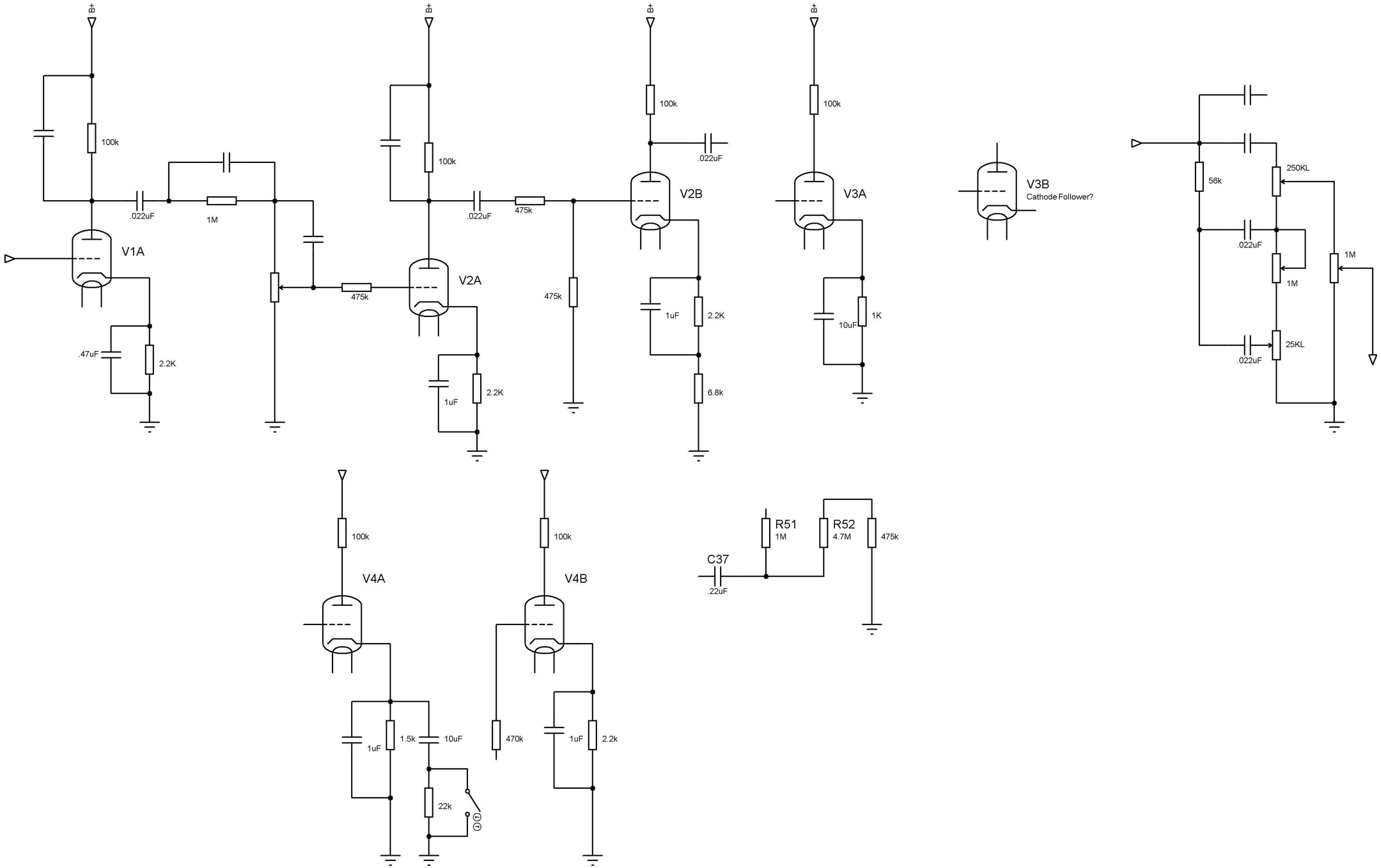

FILE NAME: Pit_bul pre.DSN	DATE: 6/12/2008
DESIGN TITLE: C:\Documents and Settings\Administrator\Des	
PATH: C:\Documents and Settings\Administrator\Desktop\Pit_bul pre.DS	PAGE: 1 of 1
BY: REV:	TIME: 8:03:13 PM

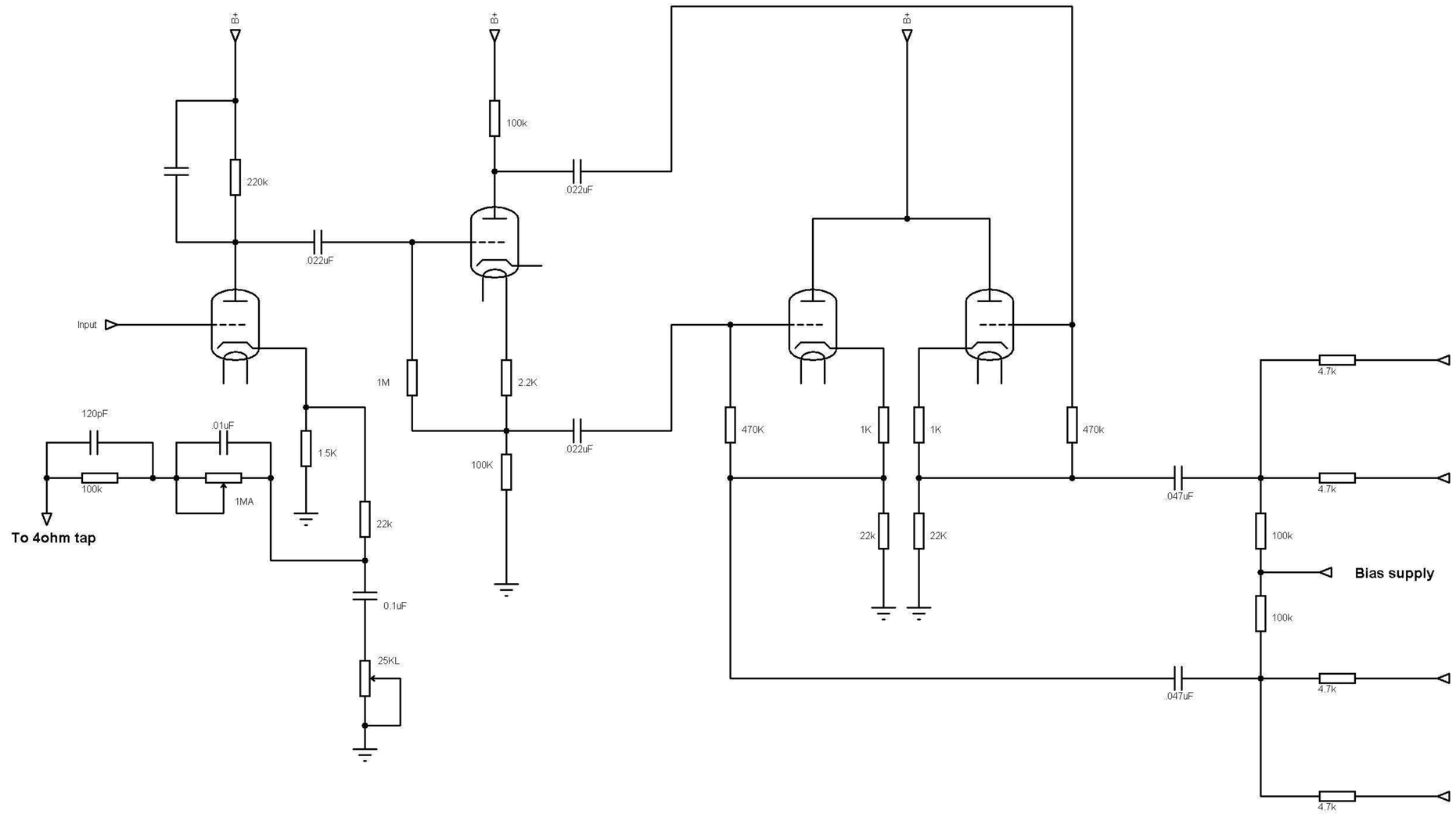

FILE NAME: Pittbull PI.DSN	DATE: 6/14/2008
DESIGN TITLE: C:\Documents and Settings\Administrator\Des	PAGE: 1 of 1
PATH: C:\Documents and Settings\Administrator\Desktop\Pittbull PI.DSN	
BY: REV:	TIME: 4:39:08 PM