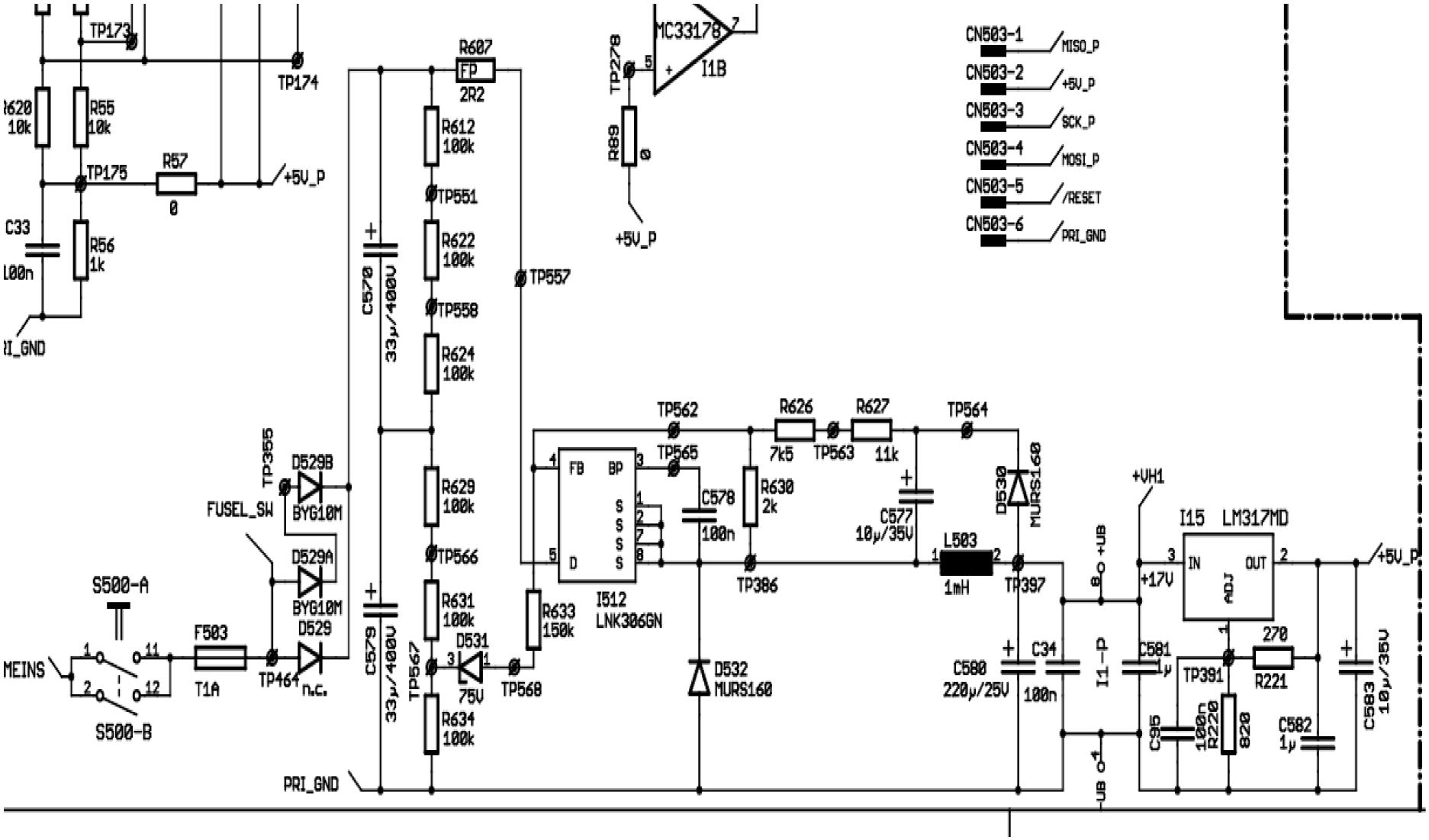
TP173
TP174
R620
10k
R55
10k
TP175
R57
0
+5V_P
C33
100n
R56
1k
PRI_GND
R607
FP
2R2
R612
100k
TP551
R622
100k
TP558
R624
100k
R629
100k
TP566
R631
100k
R634
100k
C570
33µ/400V
C579
33µ/400V
TP567
TP557
TP278
MC33178
I1B
R89
0
+5V_P
CN503-1
MISO_P
CN503-2
+5V_P
CN503-3
SCK_P
CN503-4
MOSI_P
CN503-5
/RESET
CN503-6
PRI_GND
TP355
D529B
BYG10M
FUSEL_SW
D529A
BYG10M
D529
n.c.
S500-A
S500-B
MEINS
F503
T1A
TP464
D531
75V
TP568
R633
150k
TP562
TP565
FB
BP
D
S
I512
LNK306GN
C578
100n
R630
2k
TP386
D532
MURS160
R626
7k5
TP563
R627
11k
TP564
C577
10µ/35V
L503
1mH
TP397
D530
MURS160
C580
220µ/25V
C34
100n
+UB
-UB
I1-P
+VH1
+17V
I15
LM317MD
IN
OUT
ADJ
C581
1µ
TP391
R221
270
C95
100n
R220
820
C582
1µ
C583
10µ/35V
+5V_P