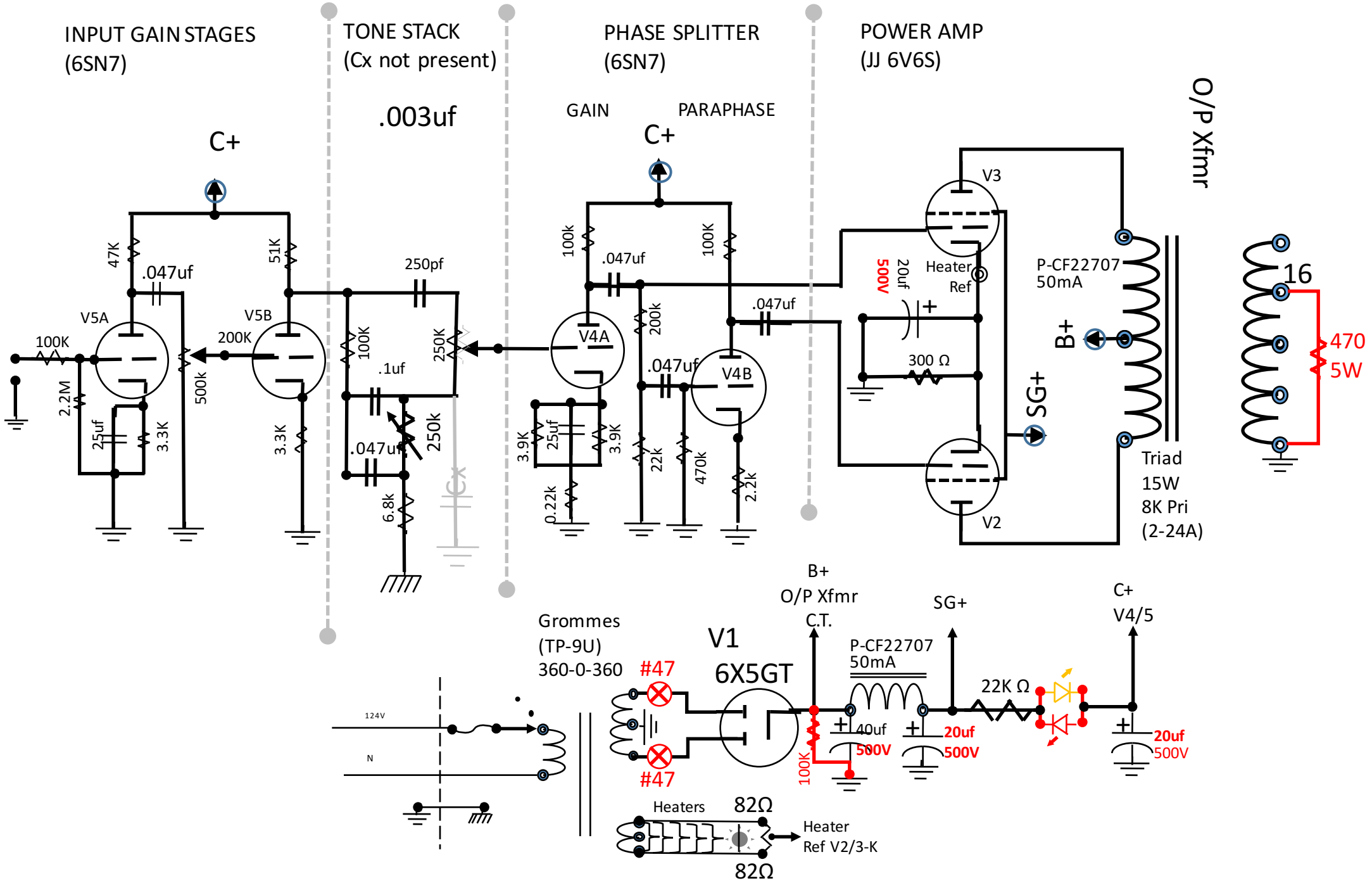
INPUT GAIN STAGES
(6SN7)
TONE STACK
(Cx not present)
PHASE SPLITTER
(6SN7)
POWER AMP
(JJ 6V6S)
O/P Xfmr
C+
.003uf
GAIN
PARAPHASE
C+
47K
.047uf
51K
250pf
100K
.047uf
V5A
V5B
100K
200K
100K
250K
.1uf
V4A
200K
.047uf
V4B
500K
2.2M
25uf
3.3K
3.3K
.047uf
250K
3.9K
25uf
3.9K
22k
470k
2.2k
0.22k
6.8k
Cx
V3
500V
20uf
Heater
Ref
P-CF22707
50mA
B+
300 Ω
SG+
V2
Triad
15W
8K Pri
(2-24A)
16
470
5W
Grommes
(TP-9U)
360-0-360
#47
#47
V1
6X5GT
B+
O/P Xfmr
C.T.
P-CF22707
50mA
SG+
22K Ω
C+
V4/5
40uf
500V
20uf
500V
20uf
500V
100K
124V
N
Heaters
82Ω
82Ω
Heater
Ref V2/3-K