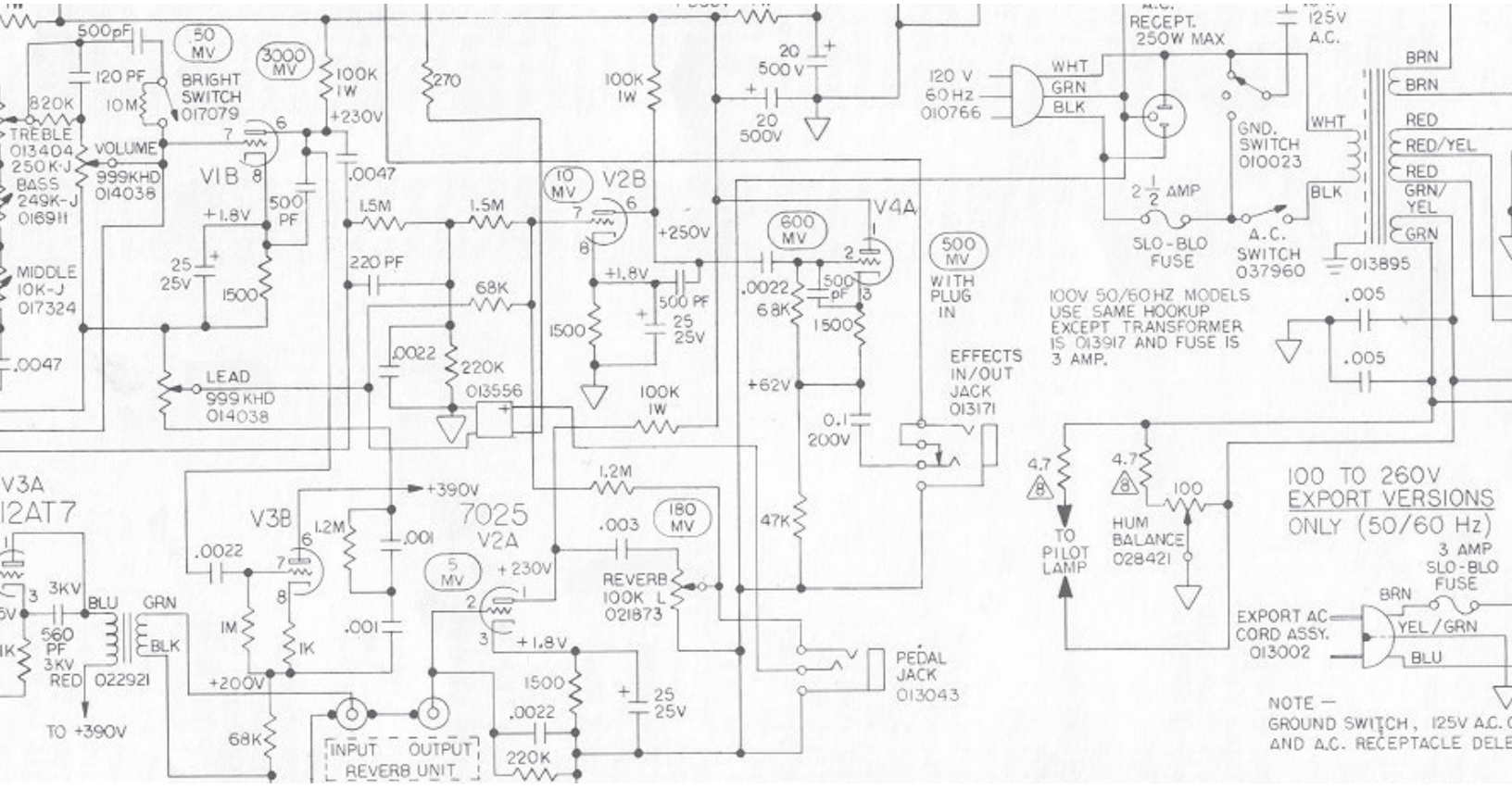

500pF
50 MV
3000 MV
120 PF
BRIGHT SWITCH 017079
10M
820K
TREBLE 013404
250K-J
VOLUME
BASS 249K-J 016911
999KHD 014038
V1B
+1.8V
500 PF
25 25V
1500
MIDDLE 10K-J 017324
.0047
LEAD 999 KHD 014038
100K 1W
+230V
.0047
270
1.5M
1.5M
220 PF
68K
.0022
220K
013556
10 MV
V2B
+250V
+1.8V
500 PF
25 25V
1500
100K 1W
20 500 V
20 500V
600 MV
V4A
.0022
68K
500 pF
1500
+62V
0.1 200V
47K
500 MV WITH PLUG IN
EFFECTS IN/OUT JACK 013171
120 V 60 Hz 010766
WHT
GRN
BLK
A.C. RECEPT. 250W MAX
125V A.C.
GND. SWITCH 010023
2 1/2 AMP
SLO-BLO FUSE
A.C. SWITCH 037960
BRN
BRN
RED
RED/YEL
RED
GRN/YEL
GRN
013895
100V 50/60HZ MODELS USE SAME HOOKUP EXCEPT TRANSFORMER IS 013917 AND FUSE IS 3 AMP.
.005
.005
V3A
12AT7
3KV
560 PF 3KV RED
BLU
GRN
BLK
022921
TO +390V
+390V
V3B
1.2M
.001
.0022
1M
1K
.001
+200V
68K
7025
V2A
5 MV
+230V
+1.8V
1.2M
.003
180 MV
REVERB 100K L 021873
1500
.0022
220K
25 25V
INPUT
OUTPUT
REVERB UNIT
PEDAL JACK 013043
4.7
TO PILOT LAMP
4.7
100
HUM BALANCE 028421
100 TO 260V EXPORT VERSIONS ONLY (50/60 Hz)
3 AMP SLO-BLO FUSE
BRN
EXPORT AC CORD ASSY. 013002
YEL/GRN
BLU
NOTE — GROUND SWITCH, 125V A.C. AND A.C. RECEPTACLE DELE