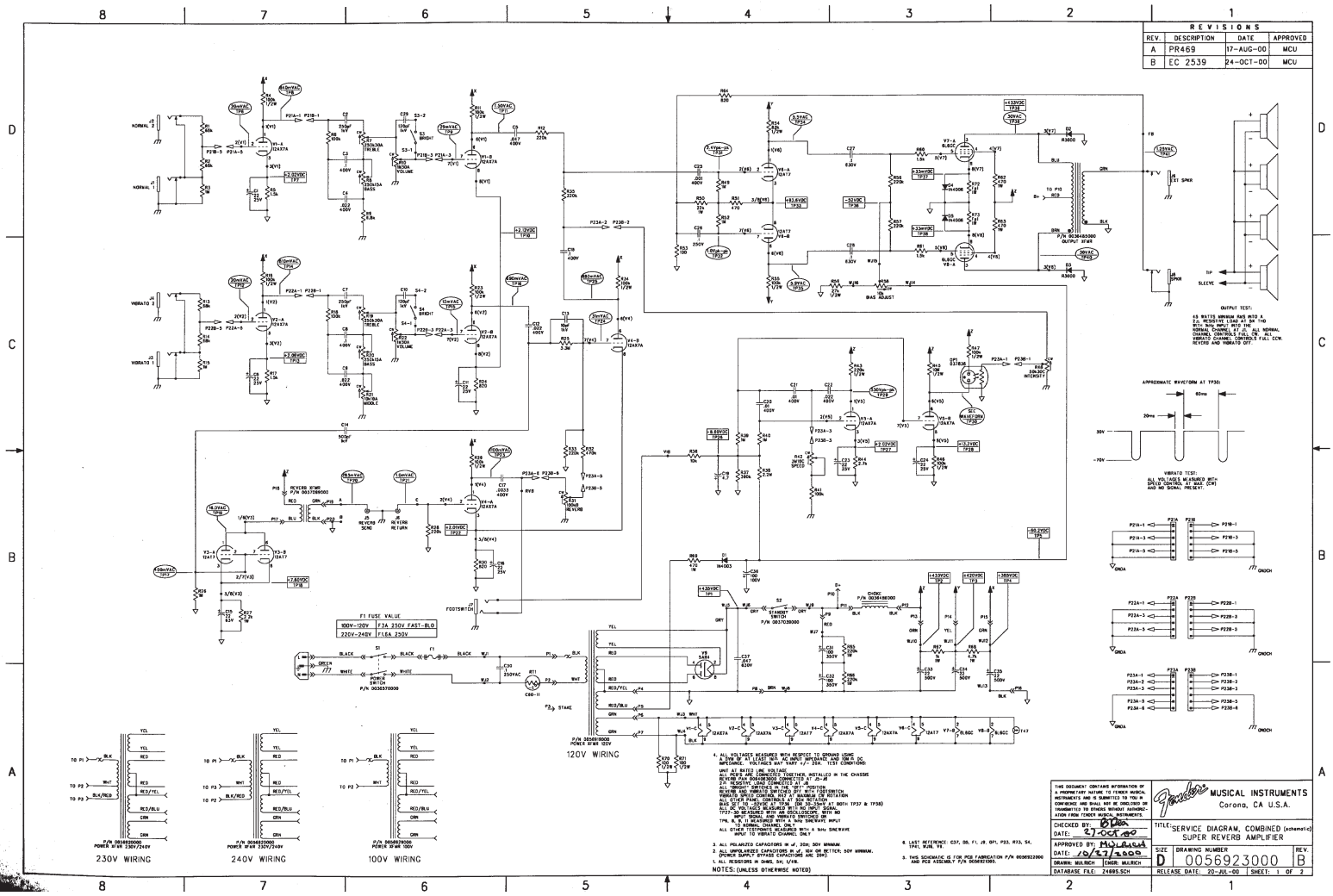

REVISIONS			
REV.	DESCRIPTION	DATE	APPROVED
A	PR469	17-AUG-00	MCU
B	EC 2539	24-OCT-00	MCU

4. ALL VOLTAGES MEASURED WITH RESPECT TO GROUND USING A 20MΩ OF AT LEAST 1MΩ AC INPUT IMPEDANCE AND 20MΩ DC IMPEDANCE. VOLTAGES MAY VARY +/- 20%. TEST CONDITIONS:
UNIT AT RATED 1MΩ VOLTAGE
ALL ACCESS ARE CONNECTED TO OTHER INSTALLED IN THE CHASSIS
REVERB PAN 0036080000 CONNECTED AT J2-J8
2.0 RESISTIVE LOAD CONNECTED AT J8
ALL SWITCHES SWITCHED IN THE OFF POSITION
REVERB AND VIBRATO SWITCHED OFF WITH FOOTSWITCH
VIBRATO SPEED CONTROL SET AT MAXIMUM CW ROTATION
ALL OTHER PANEL CONTROLS AT 50% ROTATION
BIAS SET TO 120VDC AT 1MΩ AC INPUT IMPEDANCE
ALL DC VOLTAGES MEASURED WITH NO INPUT SIGNAL
TP27-30 MEASURED WITH AN OSCILLOSCOPE WITH NO INPUT SIGNAL AND VIBRATO SWITCHED ON
TP8, 9, 9, 11 MEASURED WITH A 1kHz SINEWAVE INPUT TO NORMAL CHANNEL ONLY
ALL OTHER TEST POINTS MEASURED WITH A 1kHz SINEWAVE INPUT TO VIBRATO CHANNEL ONLY

3. ALL POLARIZED CAPACITORS IN µF, 20%, 50V MINIMUM
2. ALL UNPOLARIZED CAPACITORS IN µF, 10% OR BETTER; 50V MINIMUM. (POWER SUPPLY BYPASS CAPACITORS ARE 20%)
1. ALL RESISTORS IN OHMS, 5%, 1/4W.

NOTES: (UNLESS OTHERWISE NOTED)

6. LAST REFERENCE: C37, D8, F1, J9, OP1, P23, R33, S4, TP41, WJ8, Y8.
5. THIS SCHEMATIC IS FOR PCB FABRICATION P/N 0056923000 AND PCB ASSEMBLY P/N 0056923000.

THIS DOCUMENT CONTAINS INFORMATION OF A PROPRIETARY NATURE TO FENDER MUSICAL INSTRUMENTS AND IS SUBMITTED TO YOU IN CONFIDENCE AND SHALL NOT BE DISCLOSED OR TRANSMITTED TO OTHERS WITHOUT AUTHORIZATION FROM FENDER MUSICAL INSTRUMENTS.

CHECKED BY: [signature]
DATE: 27-OCT-00
APPROVED BY: [signature]
DATE: 10/27/2000
DRAWN: MULRICH | ENGR: MULRICH
DATABASE FILE: 24695.SCH

Fender MUSICAL INSTRUMENTS
Corona, CA U.S.A.

TITLE: SERVICE DIAGRAM, COMBINED (schematic) SUPER REVERB AMPLIFIER

SIZE	DRAWING NUMBER	REV.
D	0056923000	B

RELEASE DATE: 20-JUL-00 | SHEET: 1 OF 2