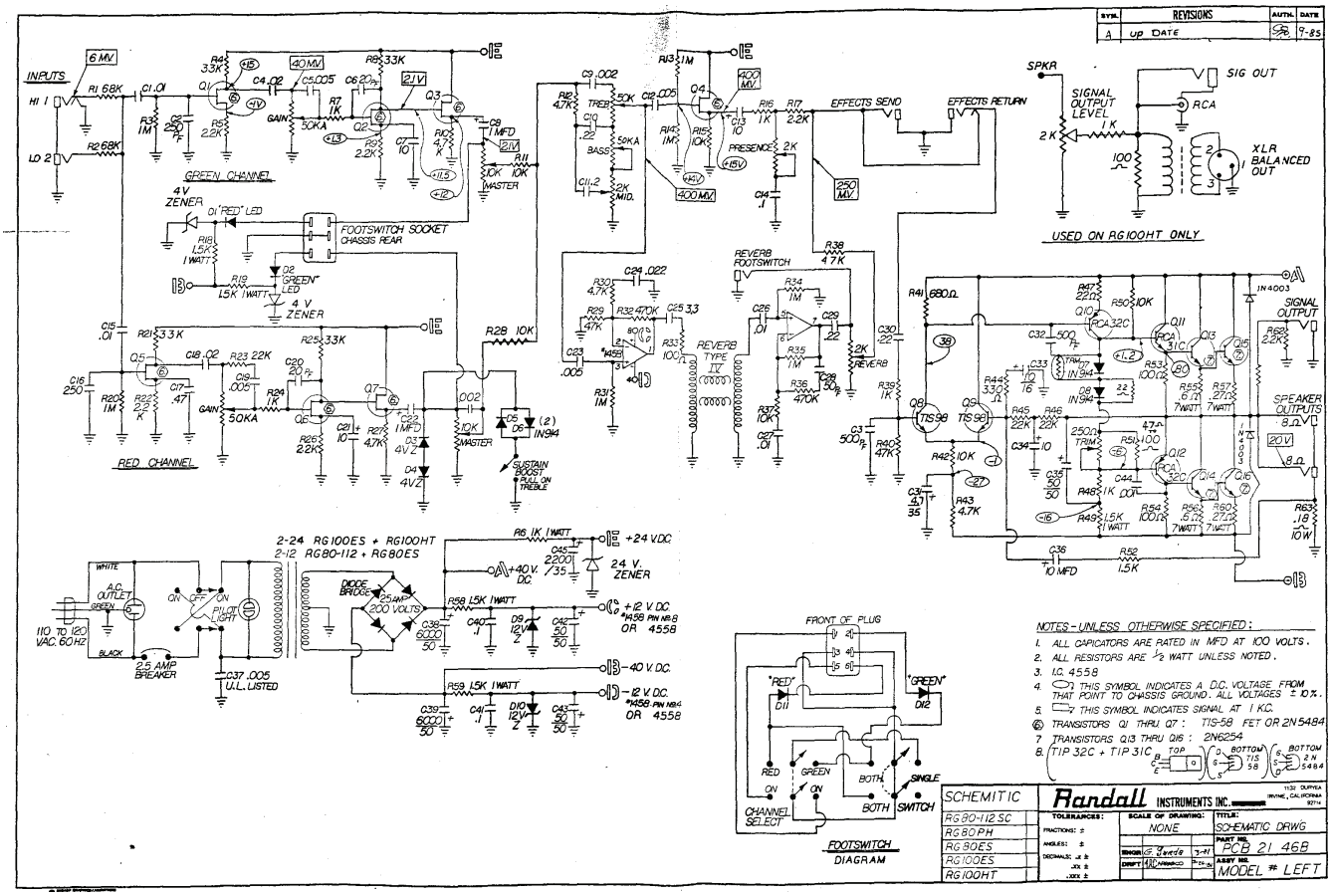
REVISIONS
A UP DATE 9-85
INPUTS
6 MV
HI 1
LO 2
R1 68K
R2 68K
C1 .01
GREEN CHANNEL
RED CHANNEL
FOOTSWITCH SOCKET CHASSIS REAR
4 V ZENER
D1 "RED" LED
D2 "GREEN" LED
R18 1.5K 1 WATT
R19 1.5K 1 WATT
R28 10K
R11 10K MASTER
C9 1MFD 20V
SUSTAIN BOOST PULL ON TREBLE
D5 D6 (2) 1N914
TREB 50K
BASS 50K A
MID. 2K
PRESENCE 2K
EFFECTS SEND
EFFECTS RETURN
REVERB FOOTSWITCH
REVERB TYPE IV
SPKR
SIGNAL OUTPUT LEVEL 1K
SIG OUT
RCA
XLR BALANCED OUT
USED ON RG100HT ONLY
SIGNAL OUTPUT
SPEAKER OUTPUTS 8Ω
2-24 RG100ES + RG100HT
2-12 RG80-112 + RG80ES
A.C. OUTLET
110 TO 120 VAC. 60HZ
2.5 AMP BREAKER
C37 .005 U.L. LISTED
DIODE BRIDGE 25 AMP 200 VOLTS
R6 1K 1 WATT
+24 V.DC.
24 V. ZENER
+40 V. DC.
R58 1.5K 1 WATT
+12 V.DC. #4558 PIN NO.8 OR 4558
-40 V.DC.
R59 1.5K 1 WATT
-12 V.DC. #4558 PIN NO.4 OR 4558
FRONT OF PLUG
"RED"
"GREEN"
RED ON
GREEN ON
BOTH
SINGLE
CHANNEL SELECT
FOOTSWITCH DIAGRAM
NOTES - UNLESS OTHERWISE SPECIFIED:
1. ALL CAPICATORS ARE RATED IN MFD AT 100 VOLTS.
2. ALL RESISTORS ARE 1/2 WATT UNLESS NOTED.
3. I.C. 4558
4. THIS SYMBOL INDICATES A D.C. VOLTAGE FROM THAT POINT TO CHASSIS GROUND. ALL VOLTAGES ± 10%.
5. THIS SYMBOL INDICATES SIGNAL AT 1 KC.
6. TRANSISTORS Q1 THRU Q7 : TIS-58 FET OR 2N5484
7. TRANSISTORS Q13 THRU Q16 : 2N6254
8. TIP 32C + TIP 31C
SCHEMITIC
RG80-112.SC
RG80PH
RG80ES
RG100ES
RG100HT
Randall INSTRUMENTS INC.
1132 DUPUYA
IRVINE, CALIFORNIA 92714
TOLERANCES:
FRACTIONS: ±
ANGLES: ±
DECIMALS: .X ±
.XX ±
.XXX ±
SCALE OF DRAWING: NONE
TITLE: SCHEMATIC DRWG
PART NO. PCB 21 468
PART NO. MODEL # LEFT