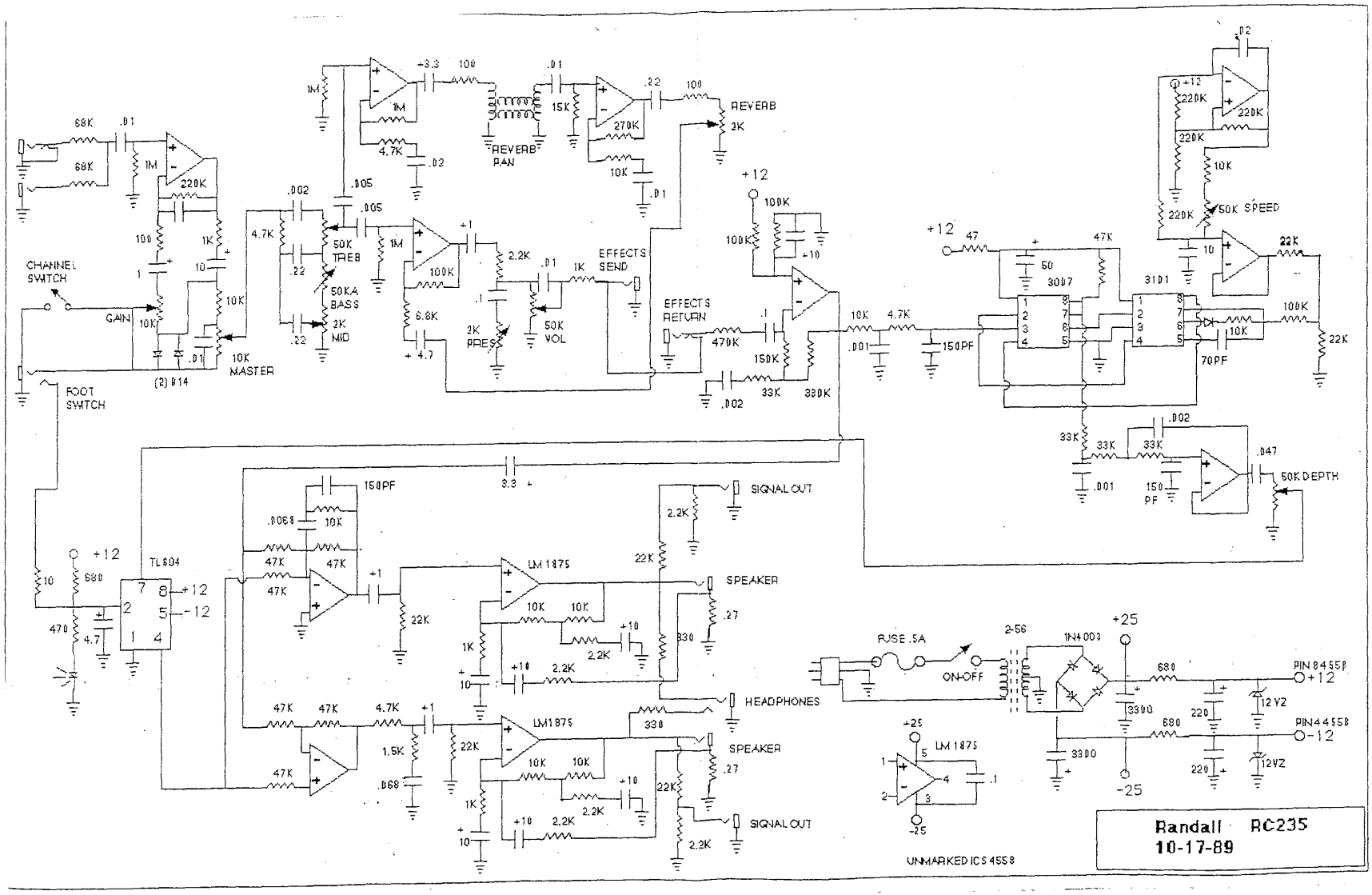
CHANNEL SWITCH
GAIN
FOOT SWITCH
(2) 914
10K MASTER
50K TREB
50K BASS
2K MID
2K PRES
50K VOL
EFFECTS SEND
EFFECTS RETURN
REVERB PAN
REVERB
2K
50K SPEED
50K DEPTH
3007
3101
TL 604
LM 1875
SIGNAL OUT
SPEAKER
HEADPHONES
FUSE .5A
ON-OFF
1N4003
PIN 8 4558
PIN 4 4558
12VZ
UNMARKED IC S 4558
Randall RC235
10-17-89