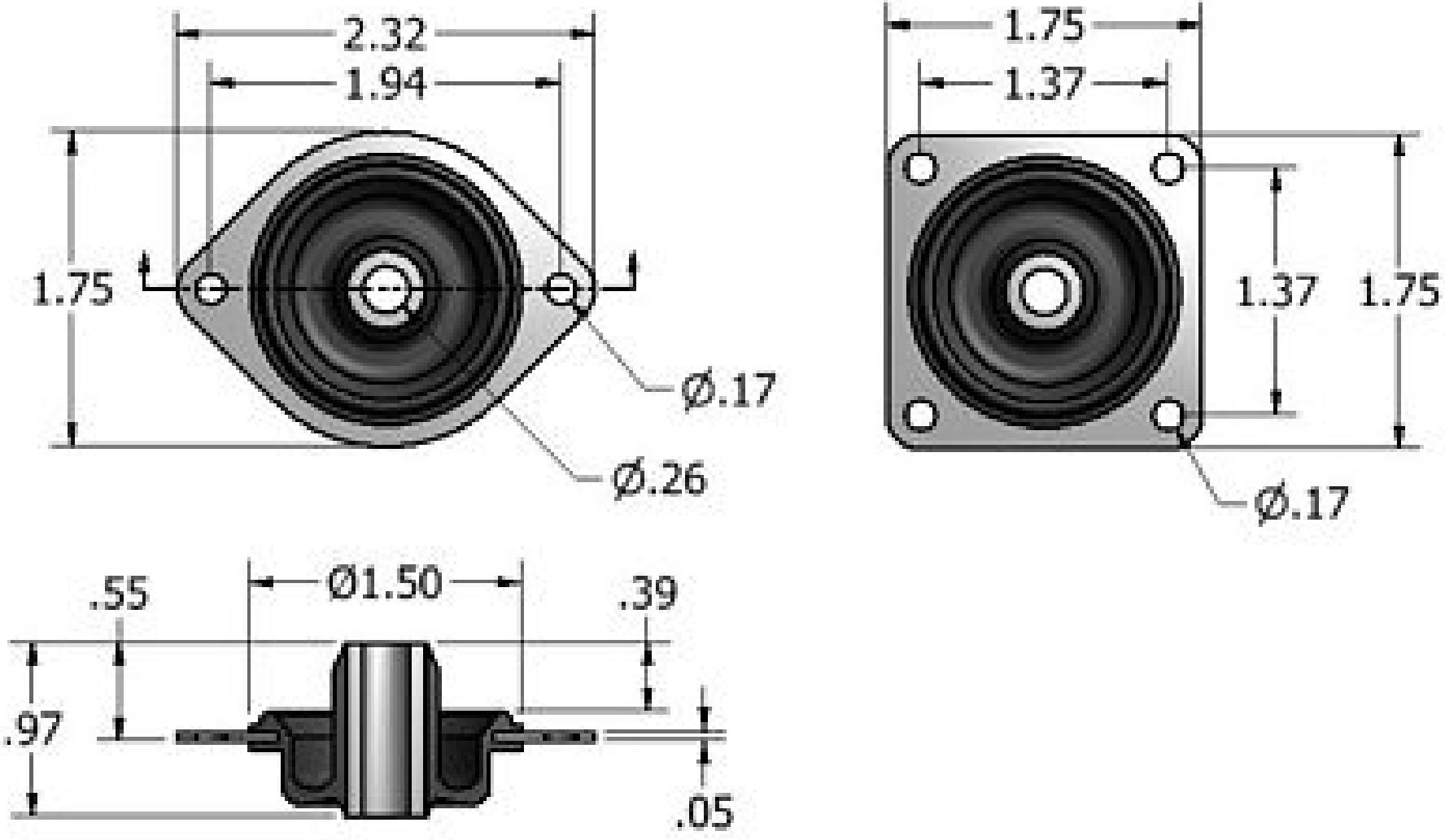# 62434 Series (6 to 16 lbs)