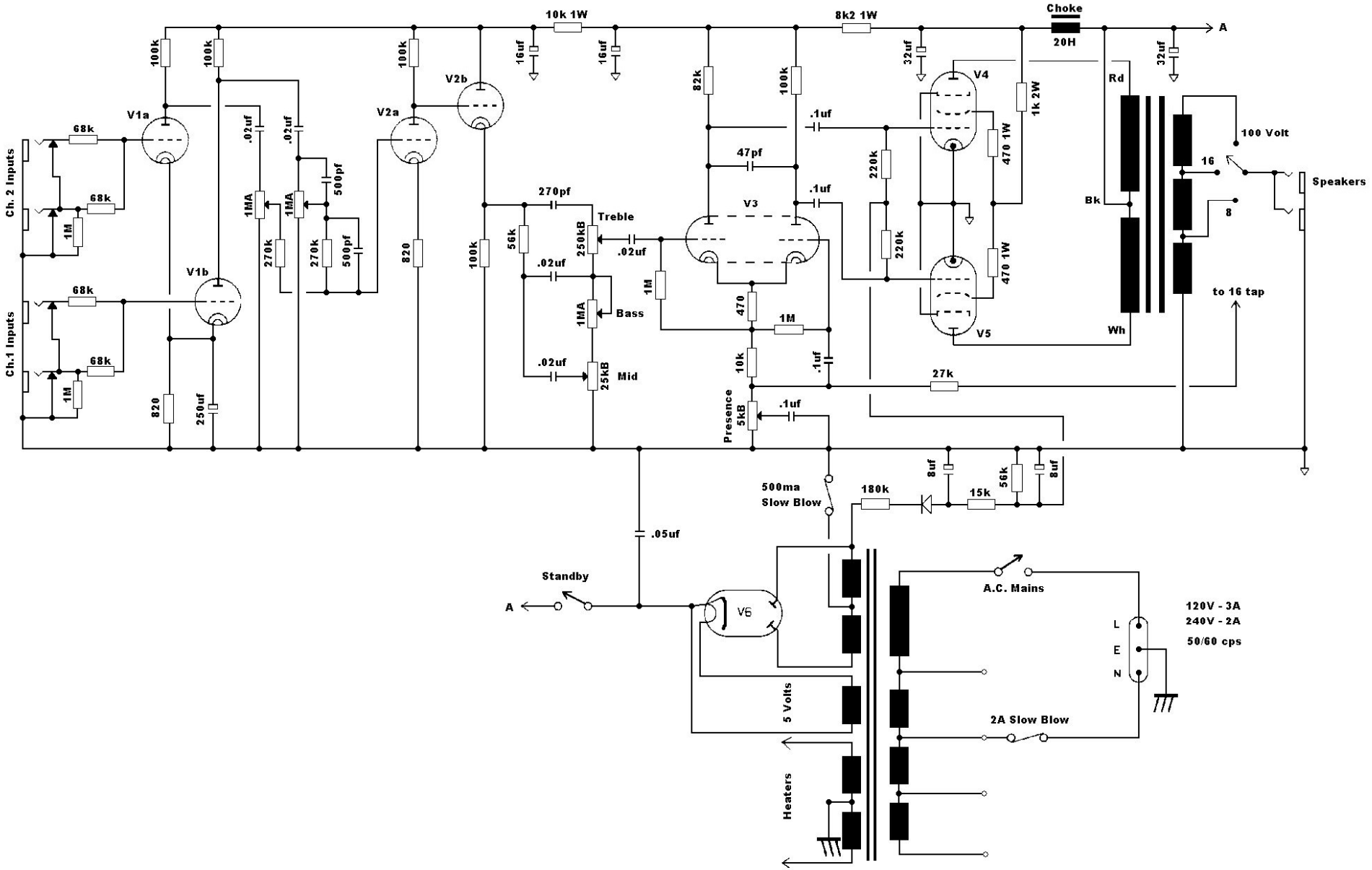

MATERIAL		DIMENSIONS IN	
MATERIAL THICKNESS		TOLERANCE UNLESS OTHERWISE STATED	
INTERNAL BEND RADII		DIMENSIONAL	
EXTERNAL B/A		CENTRES	
BEND DIE		ANGULAR	
DRAWN BKW	DATE 5/12/01	MODEL JTM45	
CHECKED	DATE		
APPROVED	DATE		

Marshall

COPYRIGHT EXISTS ON THIS DOCUMENT. IT MUST NOT BE USED FOR ANY PURPOSE THAN THAT FOR WHICH IT IS SUPPLIED AND MUST NOT BE COPIED (IN WHOLE OR IN PART) WITHOUT WRITTEN PERMISSION FROM

MARSHALL AMPLIFICATION PLC
DENBIGH ROAD, BLETCHLEY, MILTON KEYNES, MK1 1DQ.
TEL (0800)375411 FAX (0800)378110

TITLE
CIRCUIT DIAGRAM

DWG.No JTM45.DGM

ISSUE 7