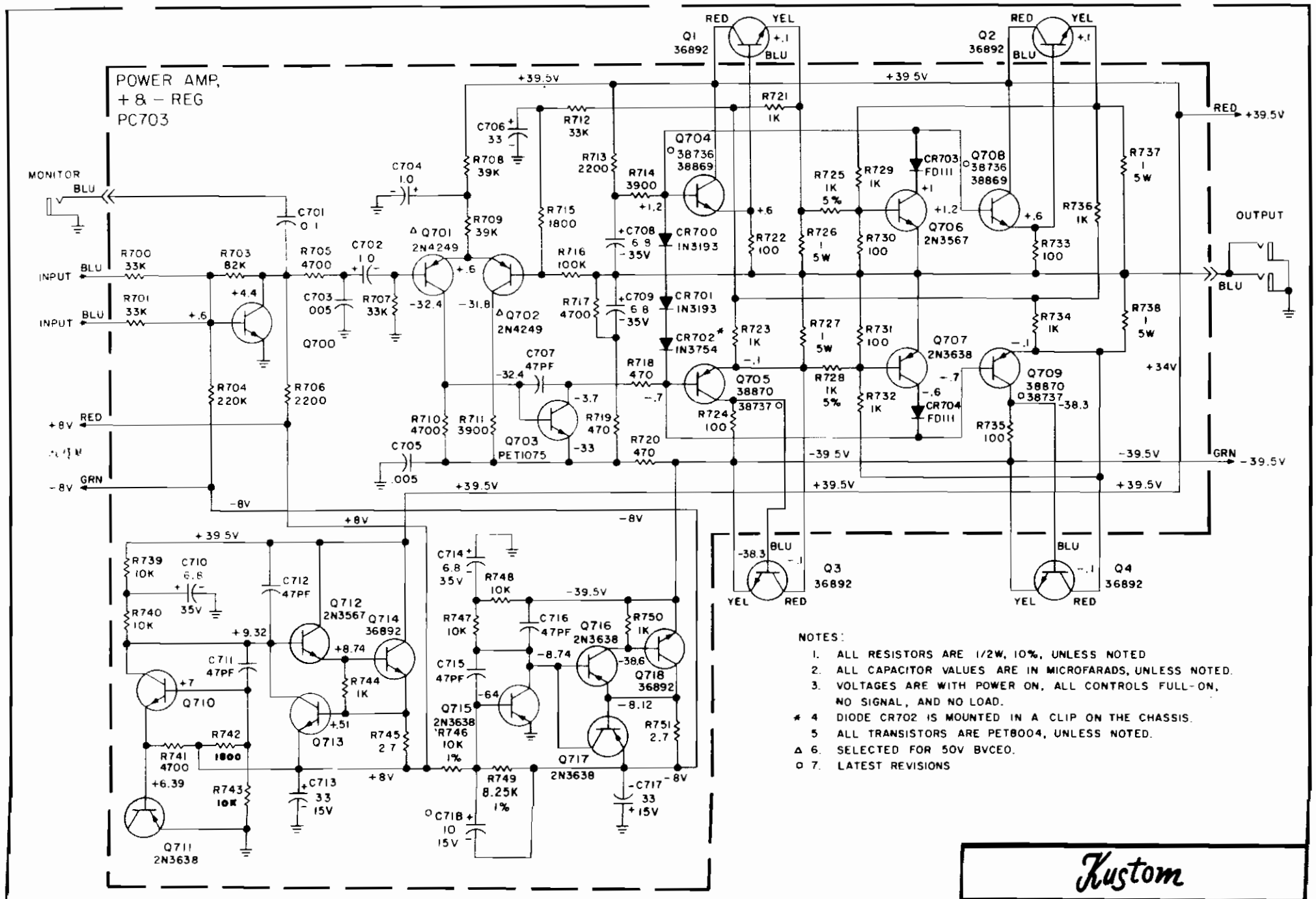

NOTES:

1. ALL RESISTORS ARE 1/2W, 10%, UNLESS NOTED
2. ALL CAPACITOR VALUES ARE IN MICROFARADS, UNLESS NOTED.
3. VOLTAGES ARE WITH POWER ON, ALL CONTROLS FULL-ON, NO SIGNAL, AND NO LOAD.
4. * DIODE CR702 IS MOUNTED IN A CLIP ON THE CHASSIS.
5. ALL TRANSISTORS ARE PET8004, UNLESS NOTED.
6. Δ SELECTED FOR 50V BVCEO.
7. o LATEST REVISIONS

Kustom

PC703

POWER AMP, + & − REG.

FORM K1016 REV.1, 8-68