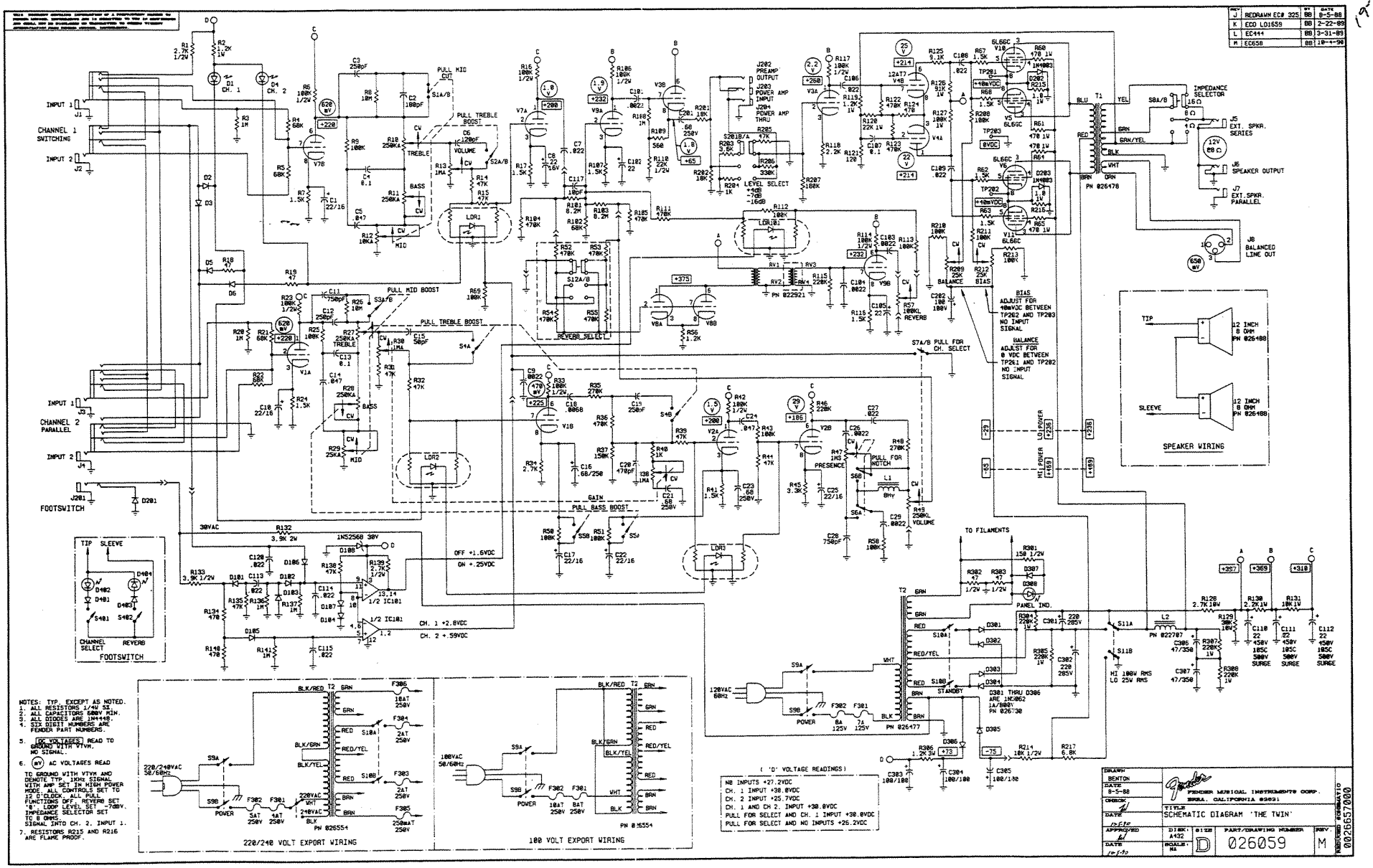
REV J REDRAWN EC# 325 BB 8-5-88
K ECO LO1659 BB 2-22-89
L EC444 BB 3-31-89
M EC658 BB 10-4-90
INPUT 1
CHANNEL 1 SWITCHING
INPUT 2
CHANNEL 2 PARALLEL
FOOTSWITCH
PULL MID CUT
PULL TREBLE BOOST
PULL MID BOOST
PULL BASS BOOST
GAIN
REVERB SELECT
PRESENCE
PULL FOR NOTCH
LEVEL SELECT
PREAMP OUTPUT
POWER AMP INPUT
POWER AMP THRU
IMPEDANCE SELECTOR
EXT. SPKR. SERIES
SPEAKER OUTPUT
EXT. SPKR. PARALLEL
BALANCED LINE OUT
BIAS ADJUST FOR 40mVDC BETWEEN TP202 AND TP203 NO INPUT SIGNAL
BALANCE ADJUST FOR 0 VDC BETWEEN TP201 AND TP202 NO INPUT SIGNAL
S7A/B PULL FOR CH. SELECT
SPEAKER WIRING
TO FILAMENTS
PANEL IND.
STANDBY
POWER
HI 100W RMS LO 25W RMS
OFF +1.6VDC
ON +.25VDC
CH. 1 +2.8VDC
CH. 2 +.59VDC
CHANNEL SELECT
REVERB
FOOTSWITCH
220/240 VOLT EXPORT WIRING
100 VOLT EXPORT WIRING
('D' VOLTAGE READINGS)
NO INPUTS +27.2VDC
CH. 1 INPUT +30.0VDC
CH. 2 INPUT +25.7VDC
CH. 1 AND CH 2. INPUT +30.0VDC
PULL FOR SELECT AND CH. 1 INPUT +30.0VDC
PULL FOR SELECT AND NO INPUTS +26.2VDC
NOTES: TYP. EXCEPT AS NOTED.
1. ALL RESISTORS 1/4W 5%.
2. ALL CAPACITORS 600V MIN.
3. ALL DIODES ARE 1N4448.
4. SIX DIGIT NUMBERS ARE FENDER PART NUMBERS.
5. DC VOLTAGES READ TO GROUND WITH VTVM, NO SIGNAL.
6. mV AC VOLTAGES READ TO GROUND WITH VTVM AND DENOTE TYP. 1KHz SIGNAL WITH AMP SET IN HIGH POWER MODE. ALL CONTROLS SET TO 12 O'CLOCK. ALL PULL FUNCTIONS OFF. REVERB SET "0". LOOP LEVEL SET -7dBV. IMPEDANCE SELECTOR SET TO 8 OHMS. SIGNAL INTO CH. 2. INPUT 1.
7. RESISTORS R215 AND R216 ARE FLAME PROOF.
DRAWN BENTON
DATE 8-5-88
CHECK
DATE
APPROVED
DATE 10-5-90
FENDER MUSICAL INSTRUMENTS CORP.
BREA, CALIFORNIA 92621
TITLE SCHEMATIC DIAGRAM 'THE TWIN'
DISK: A432
SIZE D
SCALE: NA
PART/DRAWING NUMBER 026059
REV. M
0026657000