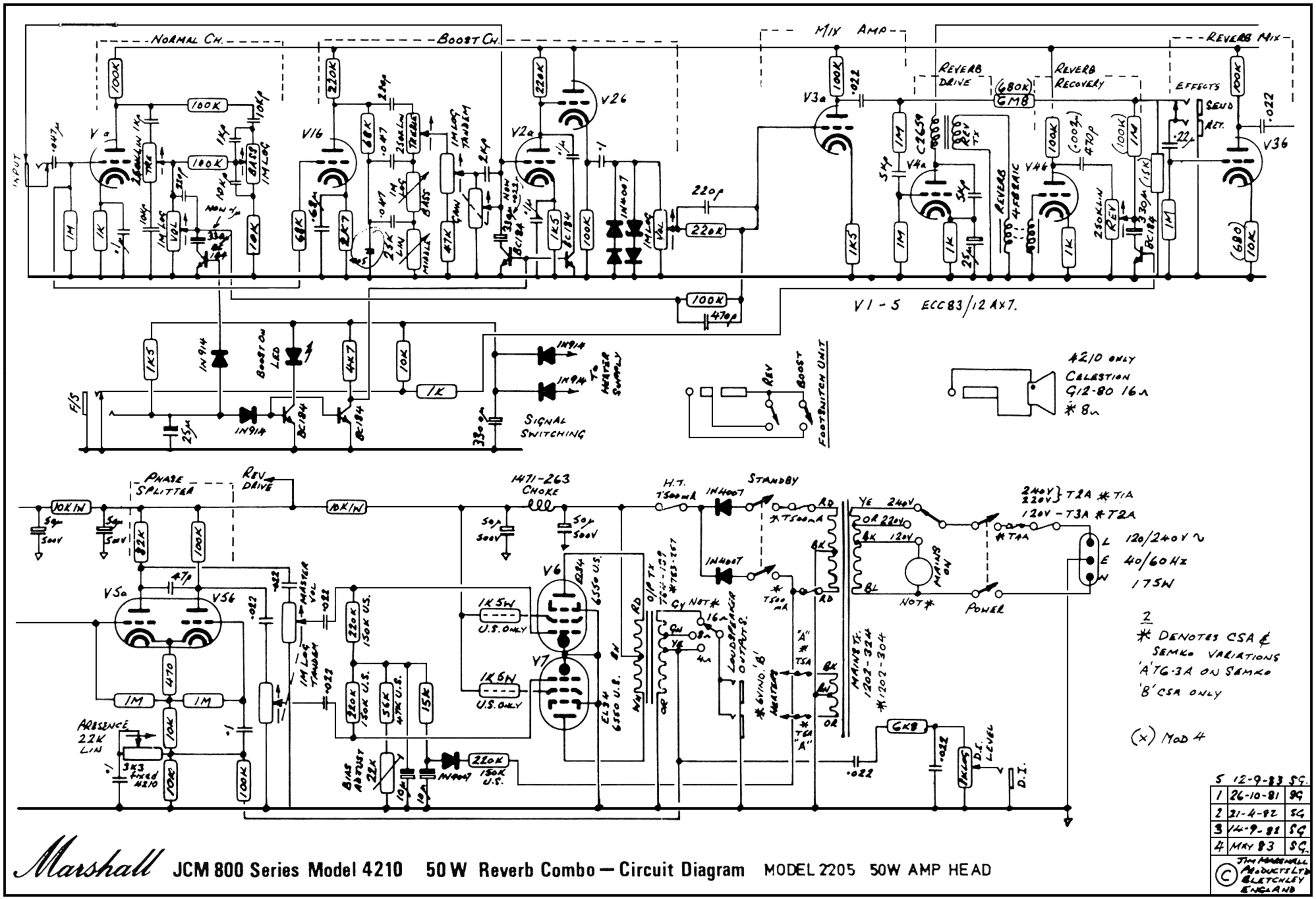

5	12-9-83	SG.
1	26-10-81	SG
2	21-4-82	SG
3	14-9-82	SG
4	MAY 83	SG.

© JIM MARSHALL PRODUCTS LTD BLETCHLEY ENGLAND

Marshall JCM 800 Series Model 4210 50 W Reverb Combo — Circuit Diagram MODEL 2205 50W AMP HEAD