1. VALUES OF CAPACITORS IN MFD.

2. ALL RESISTORS ARE 1/2 WATT UNLESS OTHERWISE NOTED.

3. VOLTAGES MEASURED FROM POINTS INDICATED TO CHASSIS WITH 20,000 OHM/VOLT METER.

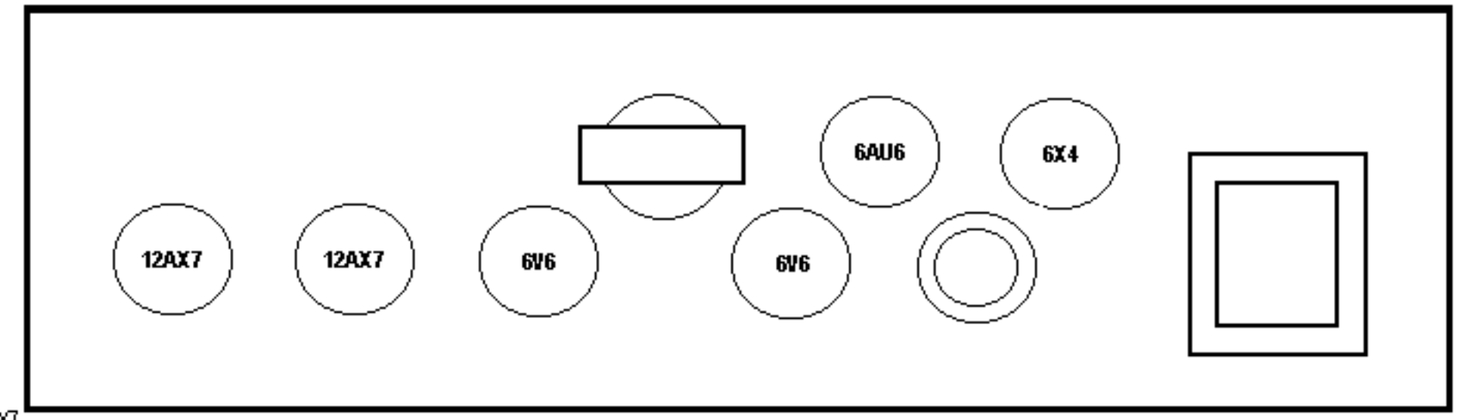

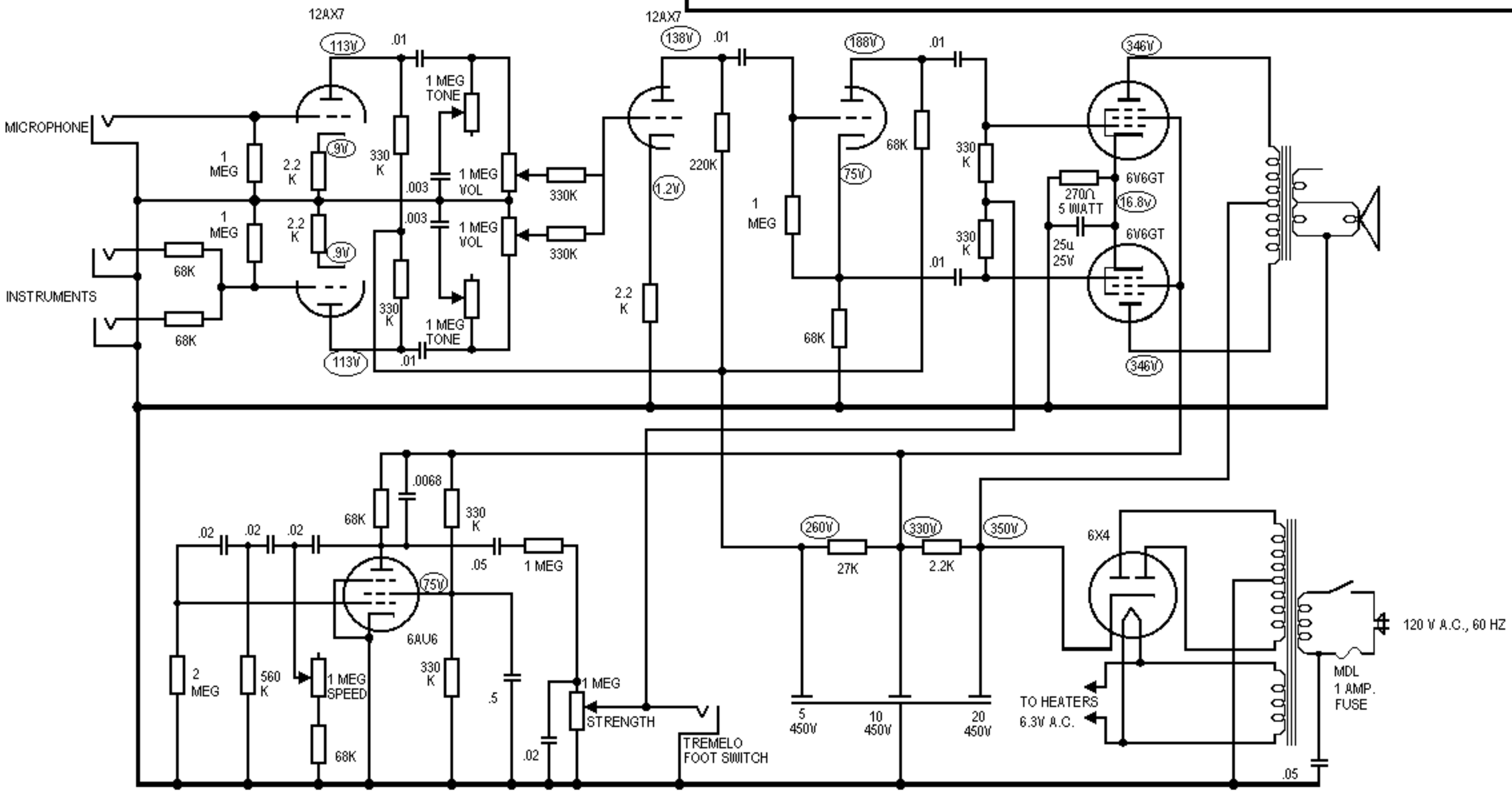

SILVERTONE MODEL 1482 (CH. 185.11020)

Schematic Diagram Courtesy of Gary Mould, 02 FEB 2001