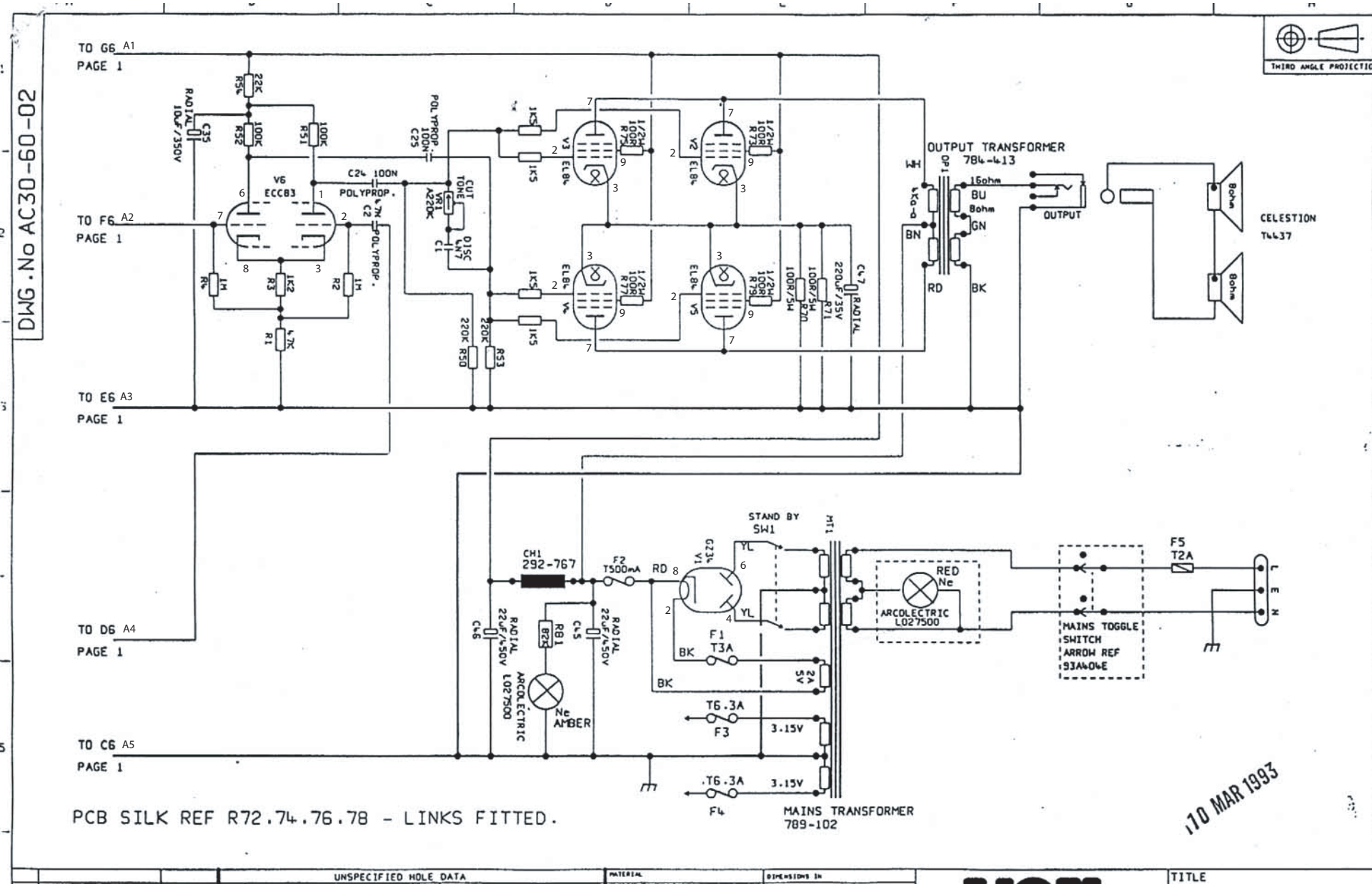

PCB SILK REF R72.74.76.78 - LINKS FITTED.

2	0319	9/3/93			
	FOB NUMBER	DATE			

UNSPECIFIED HOLE DATA

A		H	
B		J	
C		K	
D		L	
E		M	
F		N	
G		P	

MATERIAL
MATERIAL THICKNESS
INTERNAL BEND RADII
EXTERNAL B/A
BEND DIE
DRAWN S.G. DATE 18-8-92
CHECKED DATE
APPROVED DATE

DIMENSIONS IN
TOLERANCE (UNLESS OTHERWISE STATED)
DIMENSIONAL
CENTRES
ANGULAR
MODEL
AC30 REISSUE

VOX

COPYRIGHT EXISTS ON THIS DOCUMENT. IT MUST NOT BE USED FOR ANY PURPOSE THAN THAT FOR WHICH IT IS SUPPLIED AND MUST NOT BE REPRODUCED IN WHOLE OR IN PART WITHOUT WRITTEN PERMISSION FROM
© VOX APPLIFICATION LTD
HANWORTH, MIDDLESEX

TITLE
AC30 TOP BOOST
(SHT 2 OF 2)

DWG.No AC30-60-02
ISSUE 2