Block Diagram/Wiring Diagram

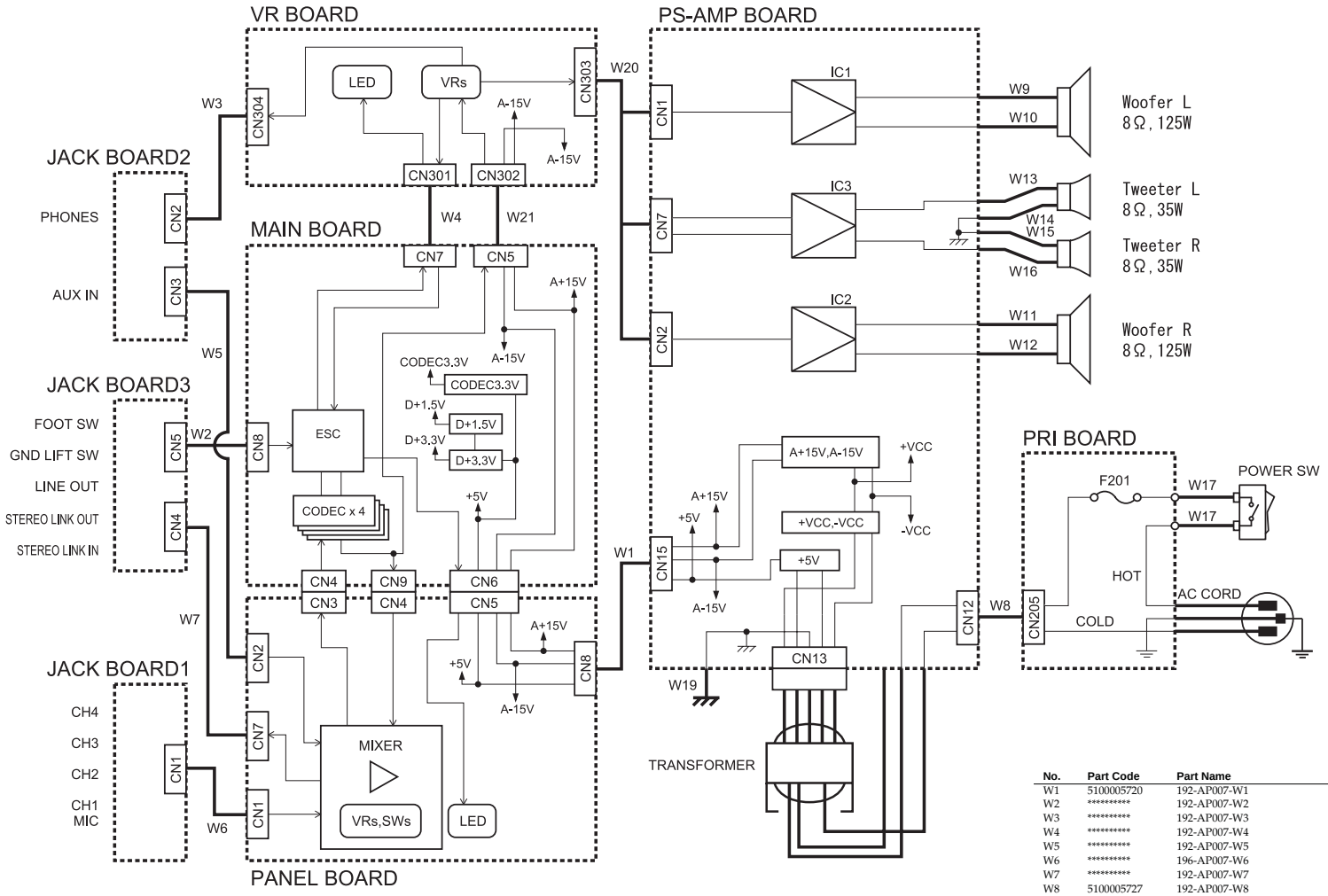

No.	Part Code	Part Name	Description	Q'ty
W1	5100005720	192-AP007-W1	8P	1
W2	**********	192-AP007-W2	6P	1
W3	**********	192-AP007-W3	3P	1
W4	**********	192-AP007-W4	5P	1
W5	**********	192-AP007-W5	7P	1
W6	**********	196-AP007-W6	12P	1
W7	**********	192-AP007-W7	12P	1
W8	5100005727	192-AP007-W8	3P	1
W9	**********	196-AP007-W9	1P(RED)	1
W10	**********	196-AP007-W10	1P(BLACK)	1
W11	**********	196-AP007-W11	1P(ORANGE)	1
W12	**********	196-AP007-W12	1P(BROWN)	1
W13	**********	196-AP007-W13	1P(WHITE)	1
W14	**********	196-AP007-W14	1P(BLUE)	1
W15	**********	196-AP007-W15	1P(YELLOW)	1
W16	**********	196-AP007-W16	1P(VIOLET)	1
W17	**********	196-AP007-W17	1P(BLACK)	1
W19	**********	196-AP007-W19	1P(BLACK)	1
W20	5100005738	196-AP007-W20	7P	1
W21	**********	192-AP007-W21	14P	1