ORANGE ROCKERVERB 100W POWER BOARD

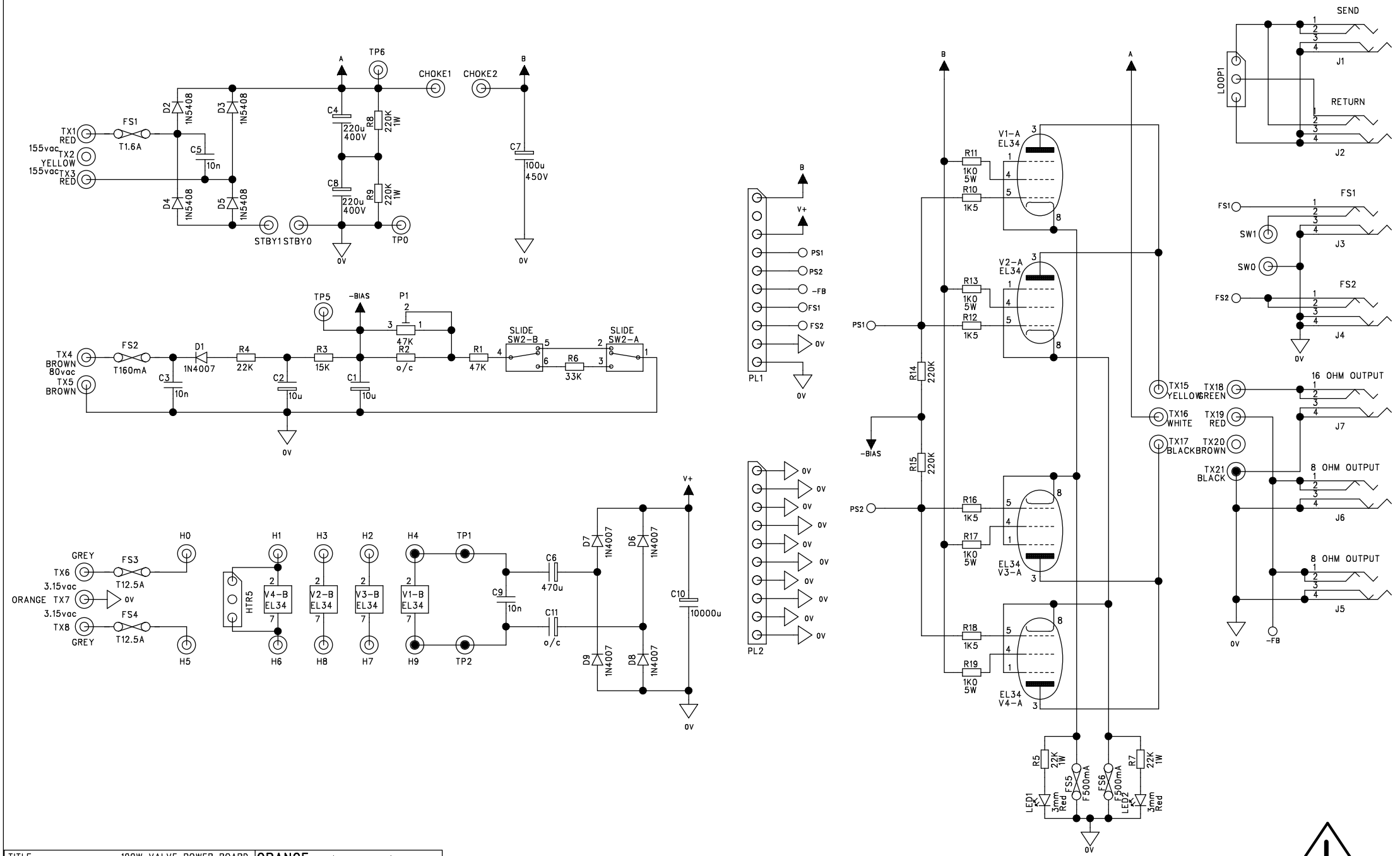

TITLE	100W VALVE POWER BOARD
PROJECT	ORANGE ROCKERVERB
DRAWING No	ORA-CD205
ISSUE	1.1
DATE	10 March 2004
DRAWN BY	Paul Stevens
ORIGINAL CIRCUIT DESIGN BY	Adrian Emsley

ORANGE Musical Electronic Co Ltd
Glenhaven Avenue
Borehamwood WD6 1AY
Great Britain
Tel: 44 (0) 20 8905 2828
Fax: +44 (0) 20 8905 2868
info@orangeamps.com

ALL TEST POINT VOLTAGES ARE DC WITH RESPECT TO TP0 0V
EXCEPT WHERE OTHERWISE INDICATED. BIAS SET FULLY ANTI-CW
TOLERANCE +/- 10%

COMPONENTS USED ARE
OF AN APPROVED TYPE AND
MUST BE REPLACED ACCORDINGLY