FENDER MODEL "VIBROLUX REVERB-AMP AA270" SCHEMATIC

THIS PRODUCT MANUFACTURED UNDER ONE OR MORE OF THE FOLLOWING U.S. PATENTS- #2817708, #2973681, 192859 & PATENTS PENDING.

NOTICE

1- VOLTAGES READ TO GROUND WITH ELECTRONIC VOLTMETER VALUES SHOWN + OR - 20%.
2- ALL RESISTORS ½ WATT 10% TOLERANCE IF NOT SPECIFIED.
3- ALL CAPACITORS AT LEAST 400 VOLT RATING IF NOT SPECIFIED.
4- VIBRATO GROUNDED

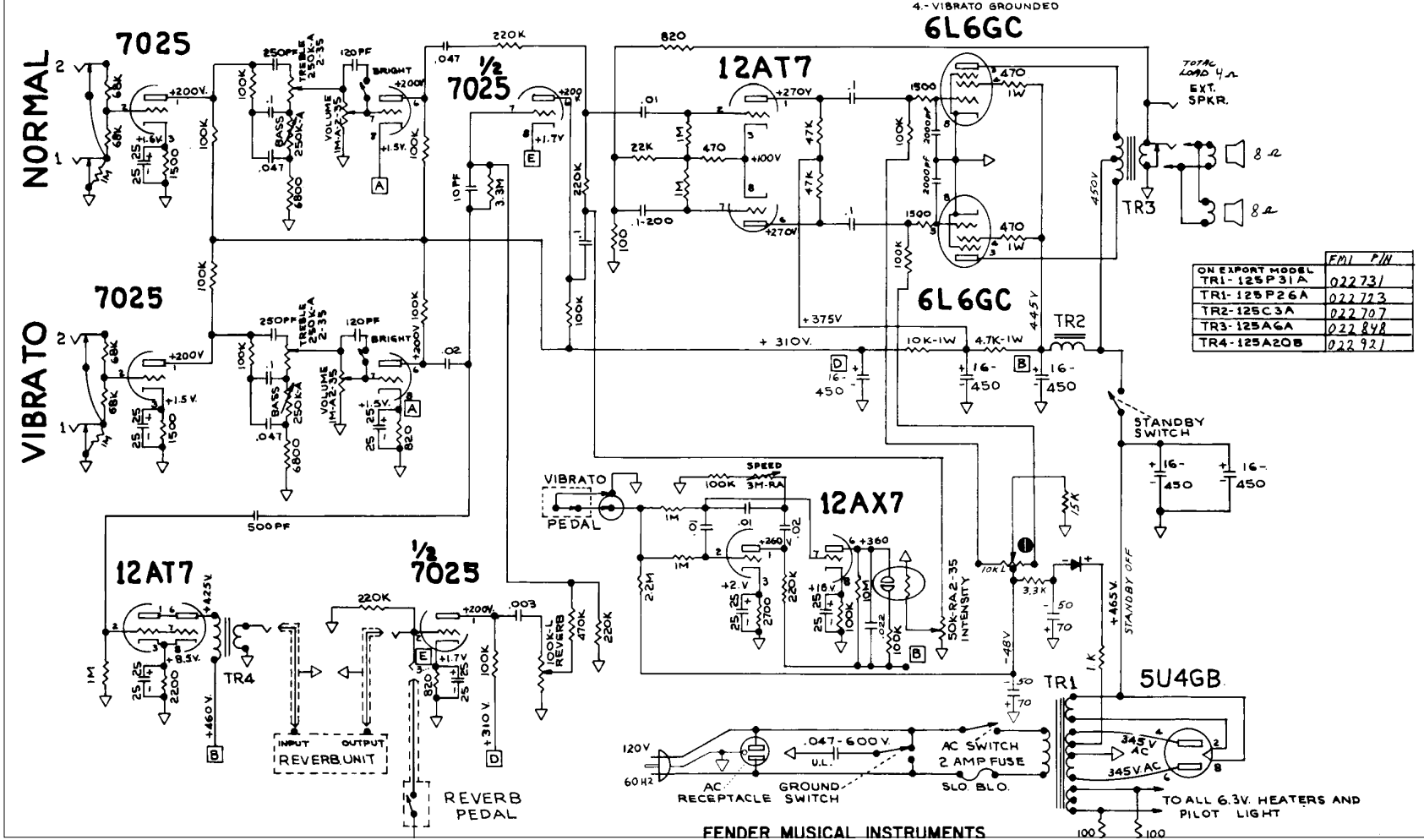

ON EXPORT MODEL	EMI P/N
TR1-125P31A	022731
TR1-125P26A	022723
TR2-125C3A	022707
TR3-125AGA	022848
TR4-125A20B	022921

FENDER MUSICAL INSTRUMENTS