REVISIONS			
LTR	DESCRIPTION	DATE	APPROVED

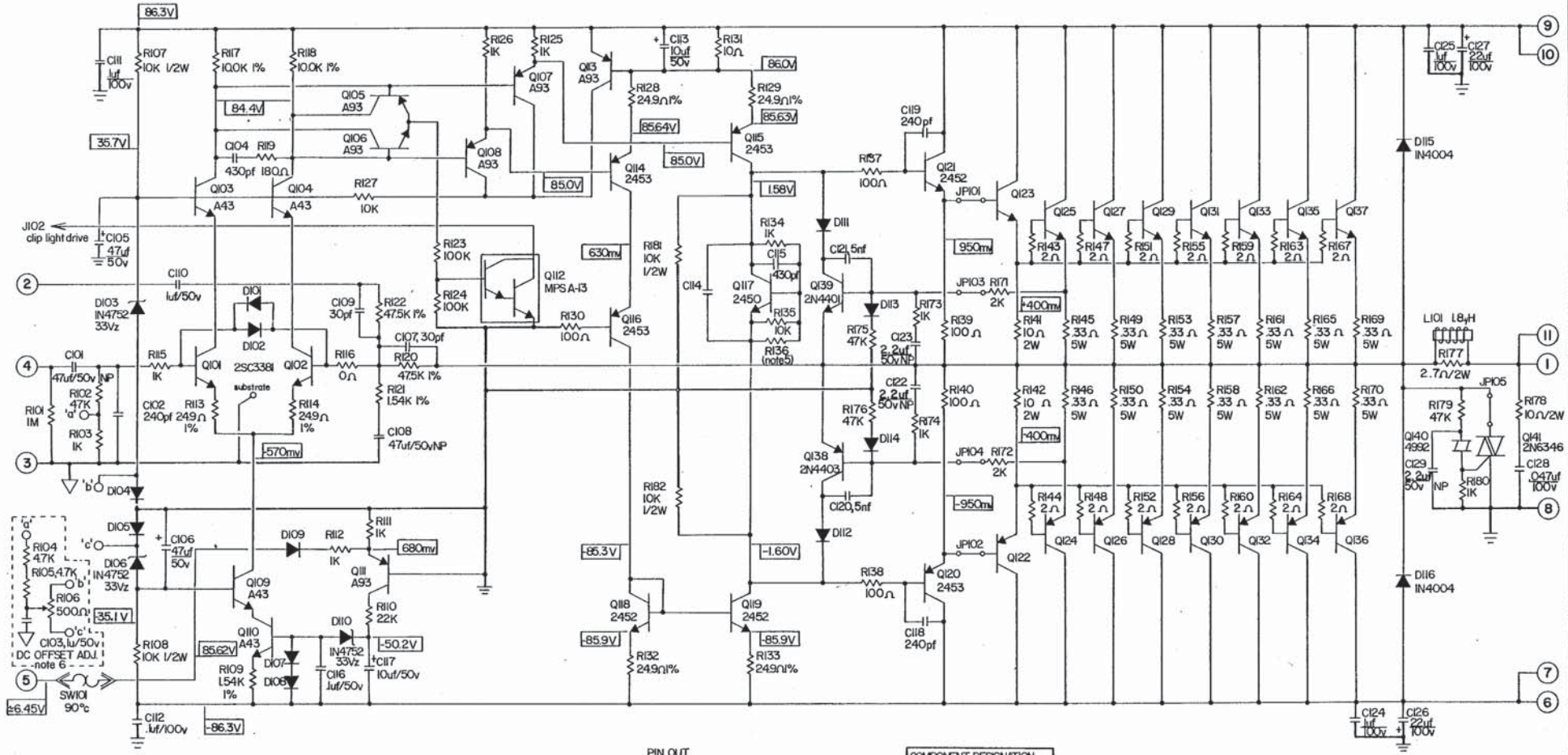

PIN OUT

J101-1	OUTPUT
2	BRIDGE INPUT
3	SIGNAL GROUND
4	SIGNAL INPUT
5	TURN-ON/FAST-OFF
6	(V-) SUPPLY
7	(V-) SUPPLY
8	POWER GROUND
9	(V+) SUPPLY
10	(V+) SUPPLY
11	OUTPUT
J102	CLIP LIGHT DRIVE

NOTES: UNLESS OTHERWISE SPECIFIED

1) ALL DIODES 1N4148 EXCEPT AS NOTED.
2) Q122,124,126,128,130,132,134,136 are 2SA1494 POWER XSTR
3) Q123,125,127,129,131,133,135,137 are 2SC3858 POWER XSTR
4) Q101,Q102 are DUAL MATCHED PAIR XSTR.
5) R136 FACTORY SELECTED FOR 400mV ACROSS R141 or R142
6) DC OFFSET CKT. FACTORY OPTION.
7) ALL RESISTORS 1/4 WATT EXCEPT AS NOTED
8) XXXV DC VOLTAGES REFERENCED TO GROUND

COMPONENT DESIGNATION NUMBERS LAST/NOT USED		
TYPE	LAST USED	DESIGNATION NUMBER
R	R182	R104 R105 R106 R163 THRU R170
C	C129	C114
D	D116	
Q	Q141	
J	J102	

DO NOT SCALE DRAWING

UNLESS OTHERWISE SPECIFIED
DIMENSIONING AND TOLERANCING PER USASI Y14.5.
DIMENSIONS ARE IN INCHES AND APPLY AFTER PLATING.
TOLERANCE ON DECIMALS: .XX = ± .03 .XXX = ± .010.
TOLERANCE ON ANGLES = ± 0° 30'
BREAK SHARP EDGES .010 MAX.
SURFACE ROUGHNESS 125

DRAWN R.O. Johnson
CHECKED S.W. Selberg 9-20-88
PROJECT ENGR S.W. Selberg 2-18-88

BGW SYSTEMS
13130 SOUTH YUKON AVE.
HAWTHORNE, CA 90250
(213) 973-8090

TITLE POWER AMPLIFIER SCHEMATIC, MODELS GTA, GTB, 750 F/G

SIZE	DRAWING NUMBER	REV
D	9008-0760	—

SCALE | SHEET 1 OF 3