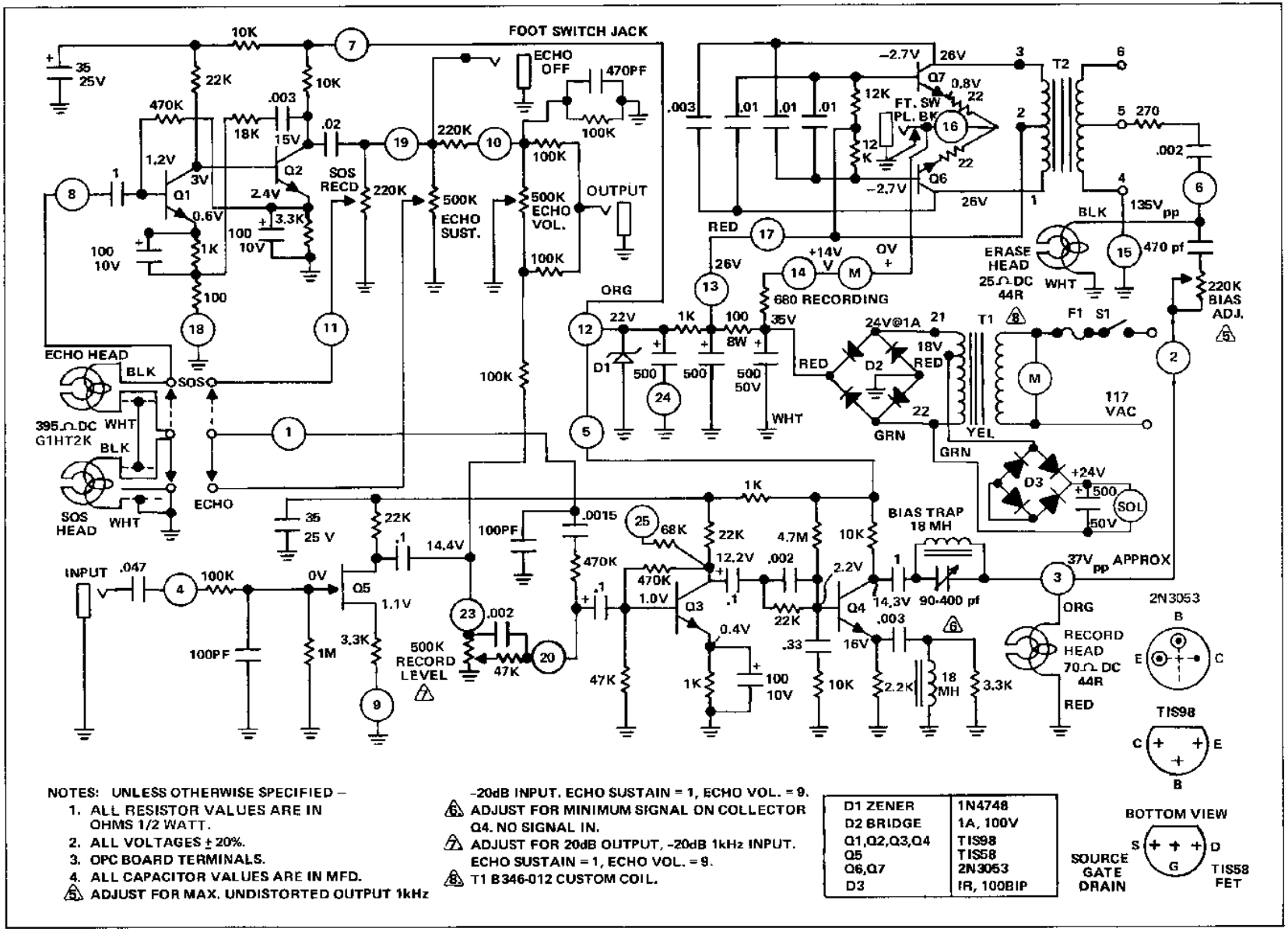

NOTES: UNLESS OTHERWISE SPECIFIED –

1. ALL RESISTOR VALUES ARE IN OHMS 1/2 WATT.
2. ALL VOLTAGES ± 20%.
3. OPC BOARD TERMINALS.
4. ALL CAPACITOR VALUES ARE IN MFD.
5. ADJUST FOR MAX. UNDISTORTED OUTPUT 1kHz -20dB INPUT. ECHO SUSTAIN = 1, ECHO VOL. = 9.
6. ADJUST FOR MINIMUM SIGNAL ON COLLECTOR Q4. NO SIGNAL IN.
7. ADJUST FOR 20dB OUTPUT, -20dB 1kHz INPUT. ECHO SUSTAIN = 1, ECHO VOL. = 9.
8. T1 B346-012 CUSTOM COIL.

D1 ZENER	1N4748
D2 BRIDGE	1A, 100V
Q1,Q2,Q3,Q4	TIS98
Q5	TIS58
Q6,Q7	2N3053
D3	IR, 100BIP

ECHOPLEX EP-3 SCHEMATIC DIAGRAM – SERIAL NO. 12961 TO 28591