SYM.	REVISIONS	AUTH.	DATE

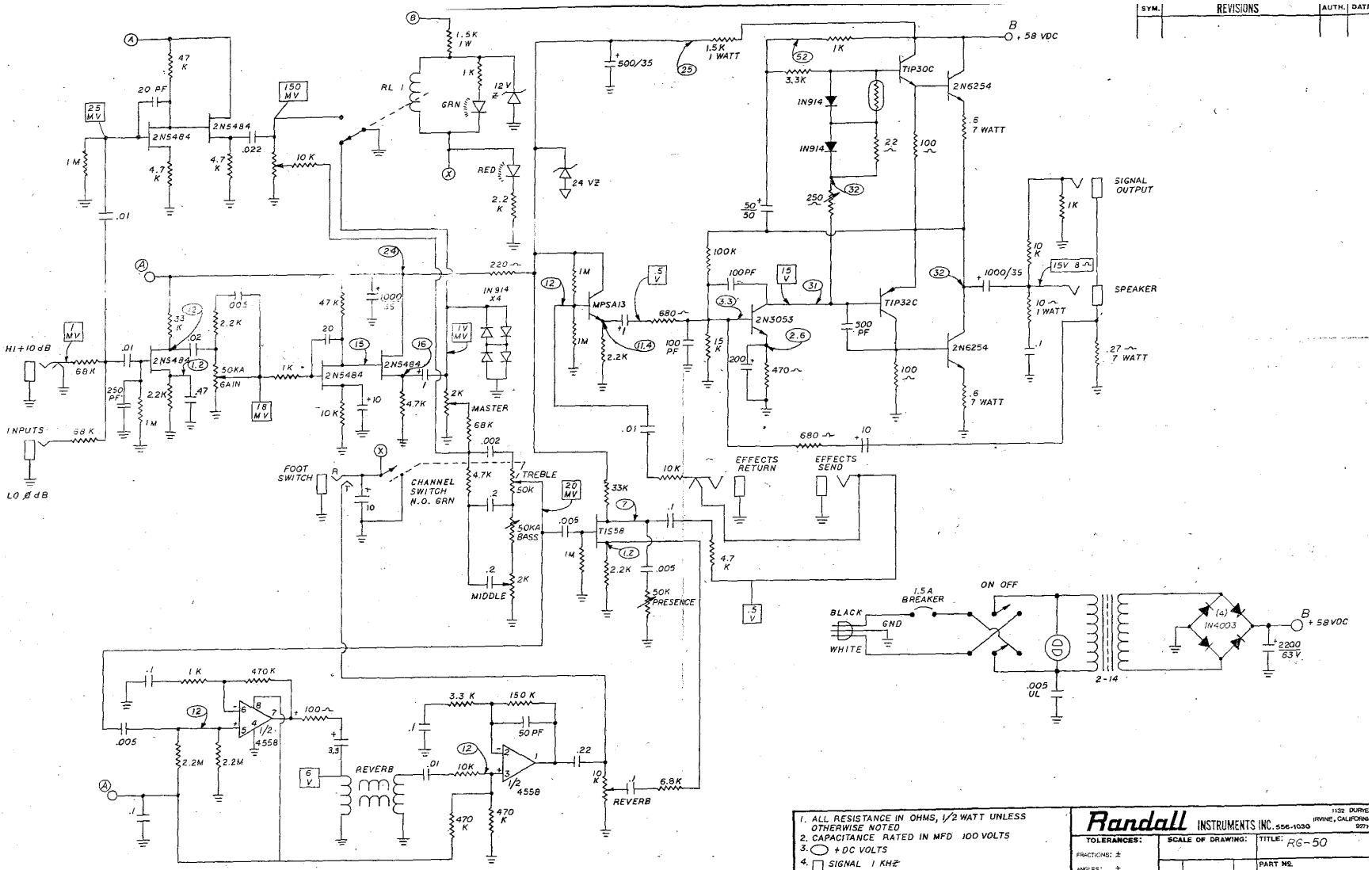

1. ALL RESISTANCE IN OHMS, 1/2 WATT UNLESS OTHERWISE NOTED
2. CAPACITANCE RATED IN MFD 100 VOLTS
3. ◯ + DC VOLTS
4. ▢ SIGNAL 1 KHZ

Randall INSTRUMENTS INC. 556-1030 — 1132 DURYEA, IRVINE, CALIFORNIA 9271

TOLERANCES:	SCALE OF DRAWING:	TITLE: RG-50
FRACTIONS: ±		PART NO.
ANGLES: ±	ENGR. E. Strada 2-83	
DECIMALS: .x ± .xx ± .xxx ±	DRFT LOWE 3-83	ASSY NO.
	REV. 10-85	