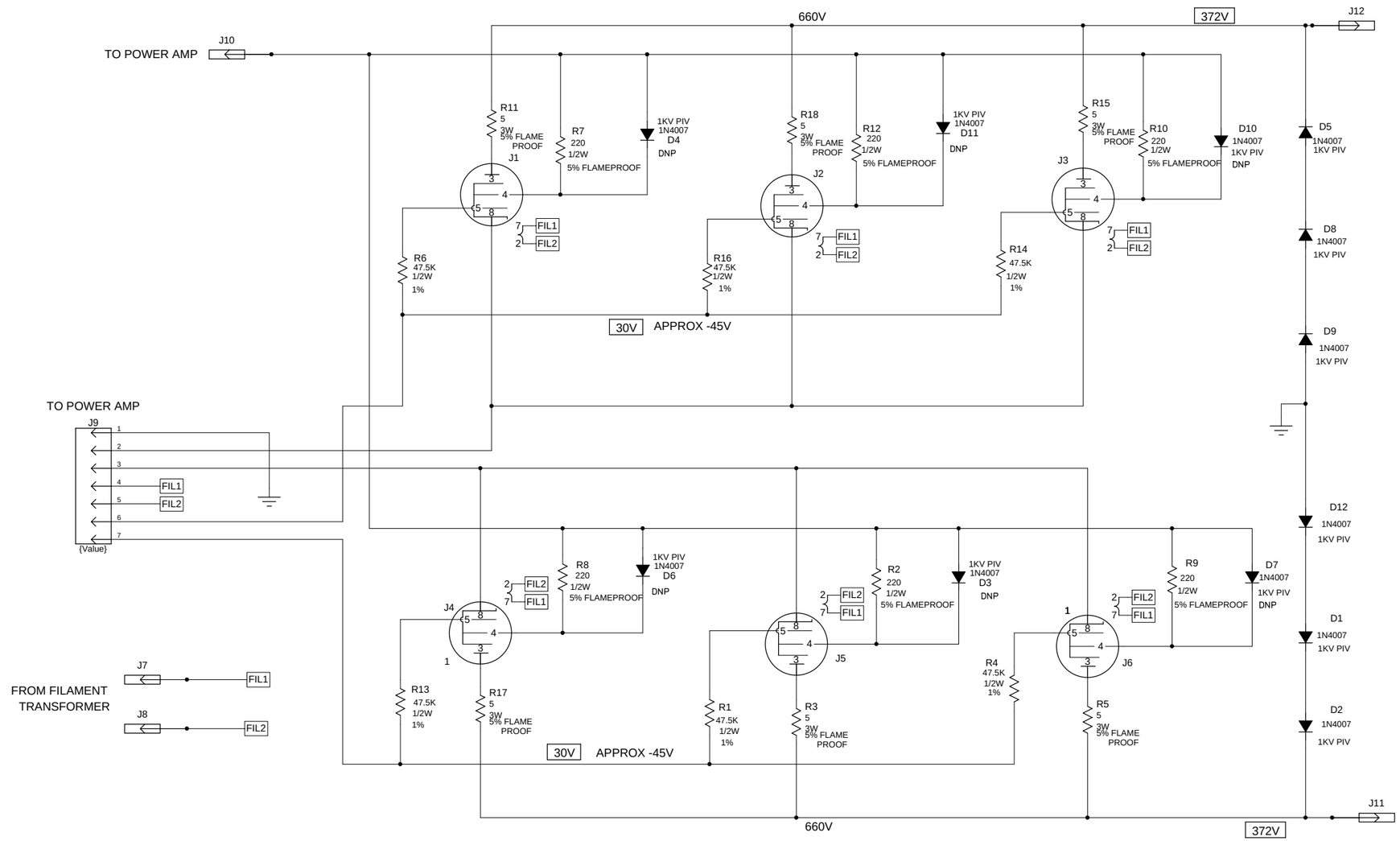

ASSY PART # 07-365-01

NOTE: D, 3, 4, 6, 7, 10 , 11 ARE NOT USED AS INDICATED BY Do Not Place 'DNP'.

CAUTION:

THIS SCHEMATIC IS PROVIDED FOR USE BY QUALIFIED PERSONNEL. TO AVOID RISK OF ELECTRIC SHOCK, REFER SERVICING TO QUALIFIED SERVICE PERSONNEL. DO NOT PERFORM ANY SERVICING BEYOND THAT EXPLAINED IN THE OPERATING INSTRUCTIONS.

NOTES:

1) CAUTION: SHOCK HAZARD!!
THIS UNIT CONTAINS HAZARDOUS VOLTAGE. DISCONNECT POWER AND BE SURE POWER SUPPLY IS DISCHARGED BEFORE TOUCHING INTERNAL PARTS.

2) UNLESS NOTED, RESISTOR VALUES IN OHMS, 1/4W-5% TOL. CAPACITOR VALUES IN MICROFARADS, 50V-10% TOL.

3) VOLTAGES ARE MEASURED WITH 1 MEGOHM OSCILLOSCOPE AND 10 MEGOHM DIGITAL VOLTMETER.

REV	Date	DESCRIPTION	Ecr(s)/Ecn(s)	Chgd By	Appvd by	Date
0	3/13/06	CONTROL ISSUE				

THE INFORMATION CONTAINED ON THIS DRAWING IS PROPRIETARY TO ST. LOUIS MUSIC, INC

Signatures:		Date:
Drawn:	GM	08/17/05
Checked:		
Released:		

Plot Date: Thu Apr 20, 2006
Plot Time: 14:10:56
Tolerance:
Drawing Size: C
Drawing Type: Schematic
Class Code: NONE
Sheet 1 of 1

GM Electronics
11880 Borman Drive, St. Louis, MO 63146

First Used On:

Drawing Title: SCHEMATIC - TUBE BD

Drawing Number: 07S365

06A365-01