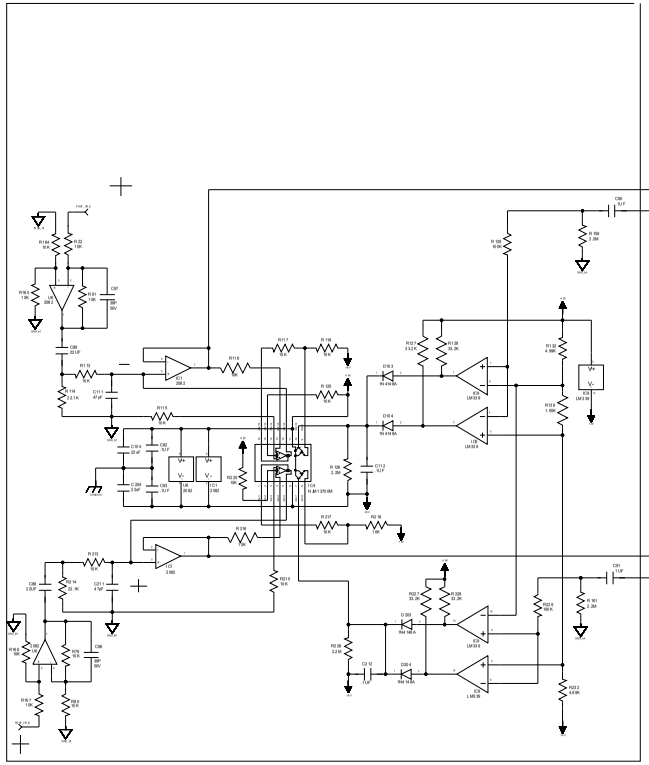

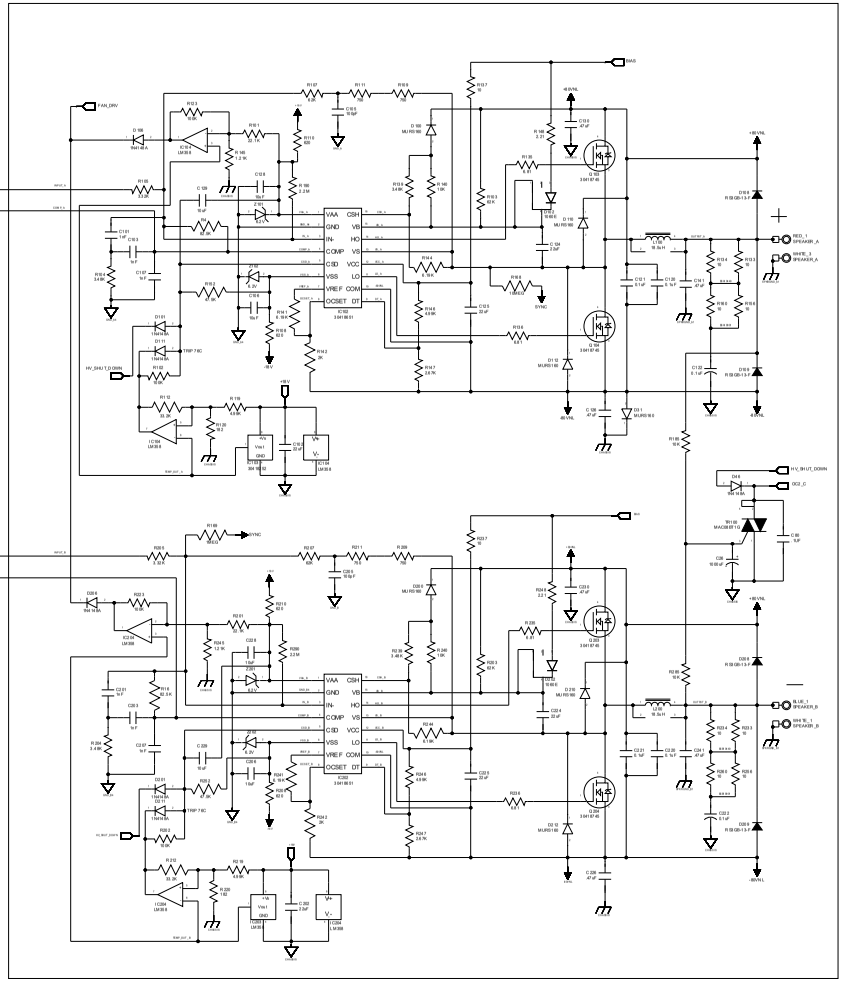

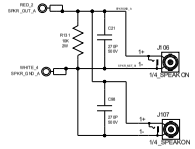

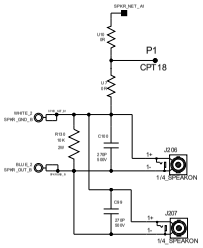

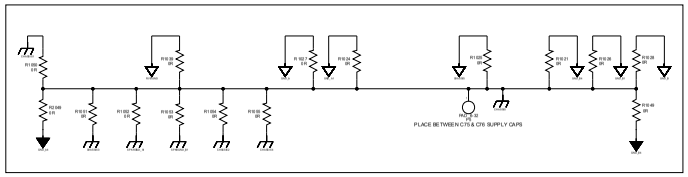

REVISION RECORD			
LTR	ECO NO	APPROVED	DATE

DRAWN: jdb	DATE: 10/08/07	PEAVEY ELECTRONICS INC.	
CHECKED:	DATE:	TITLE: XR1212 Amplifier	
QUALITY CONTROL:	DATE:	CODE: / SIZE: / DRAWING NO:	REV: 02
RELEASED:	DATE:	SCALE:	SHEET: 1 OF 1