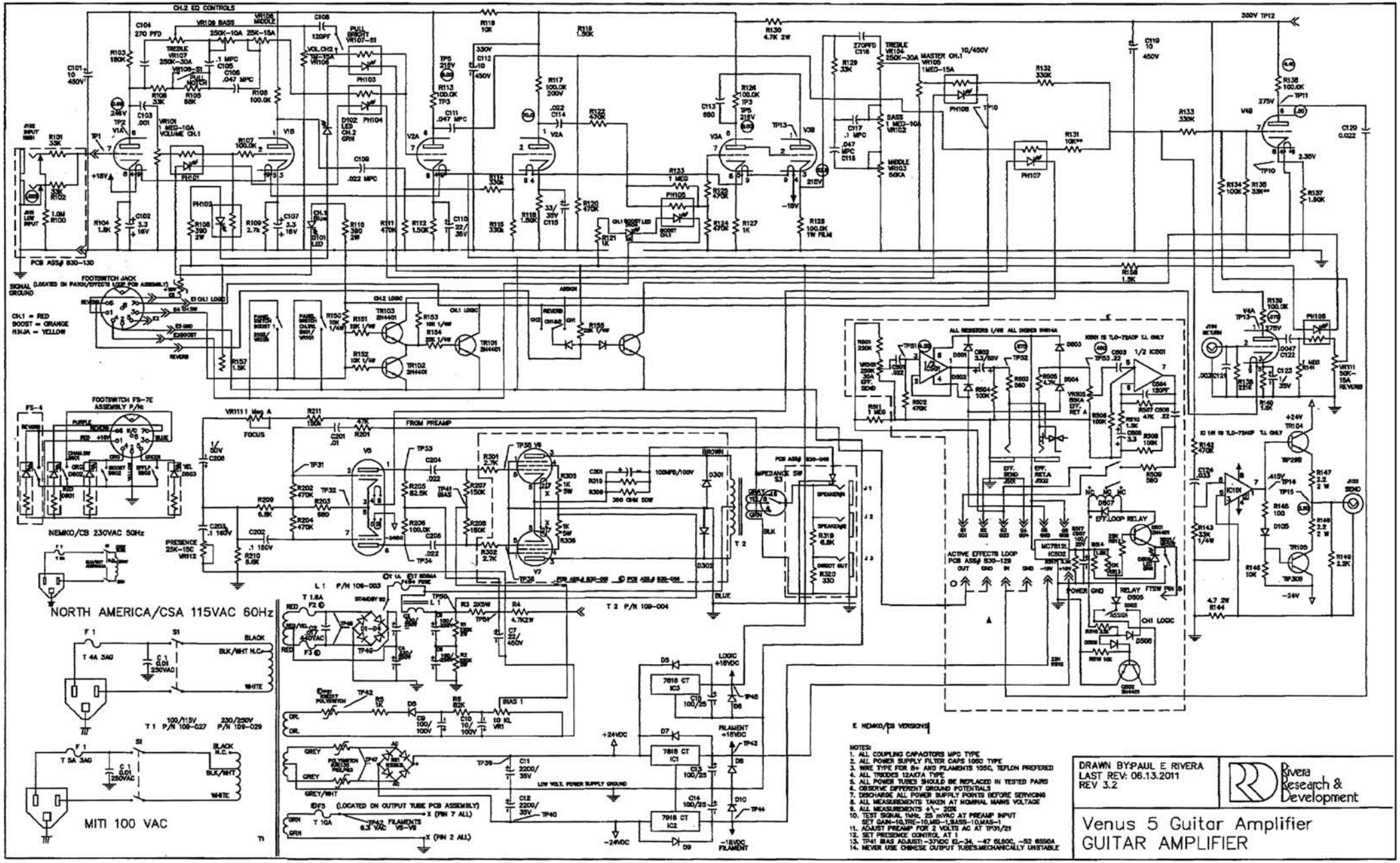
CH.2 EQ CONTROLS
FOOTSWITCH JACK
SIGNAL GROUND
CH.1 = RED
BOOST = ORANGE
REVERB = YELLOW
PCB ASS# 830-130
FOOTSWITCH FS-7E ASSEMBLY P/N
NEMKO/CB 230VAC 50Hz
NORTH AMERICA/CSA 115VAC 60Hz
MITI 100 VAC
FROM PREAMP
ACTIVE EFFECTS LOOP PCB ASS# 830-129
EFF. LOOP RELAY
CH1 LOGIC
CH2 LOGIC
MASTER CH.1
BASS
MIDDLE
TREBLE
BRIGHT
PULL NOTCH
FOCUS
PRESENCE
IMPEDANCE SW
T 2 P/N 109-004
T 1 P/N 109-027
T 1 P/N 109-029
LOW VOLT. POWER SUPPLY GROUND
FILAMENTS 6.3 VAC
E NEMKO/CB VERSIONS
NOTES:
1. ALL COUPLING CAPACITORS MPC TYPE
2. ALL POWER SUPPLY FILTER CAPS 105C TYPE
3. WIRE TYPE FOR B+ AND FILAMENTS 105C, TEFLON PREFERED
4. ALL TRIODES 12AX7A TYPE
5. ALL POWER TUBES SHOULD BE REPLACED IN TESTED PAIRS
6. OBSERVE DIFFERENT GROUND POTENTIALS
7. DISCHARGE ALL POWER SUPPLY POINTS BEFORE SERVICING
8. ALL MEASUREMENTS TAKEN AT NOMINAL MAINS VOLTAGE
9. ALL MEASUREMENTS +\- 20%
10. TEST SIGNAL 1kHz, 25 mVAC AT PREAMP INPUT
SET GAIN-10,TRE-10,MID-1,BASS-10,MAS-1
11. ADJUST PREAMP FOR 2 VOLTS AC AT TP31/21
12. SET PRESENCE CONTROL AT 1
13. TP41 BIAS ADJUST: -37VDC EL-34, -47 6L6GC, -52 6550A
14. NEVER USE CHINESE OUTPUT TUBES,MECHANICALLY UNSTABLE
DRAWN BY:PAUL E RIVERA
LAST REV: 06.13.2011
REV 3.2
Rivera Research & Development
Venus 5 Guitar Amplifier
GUITAR AMPLIFIER