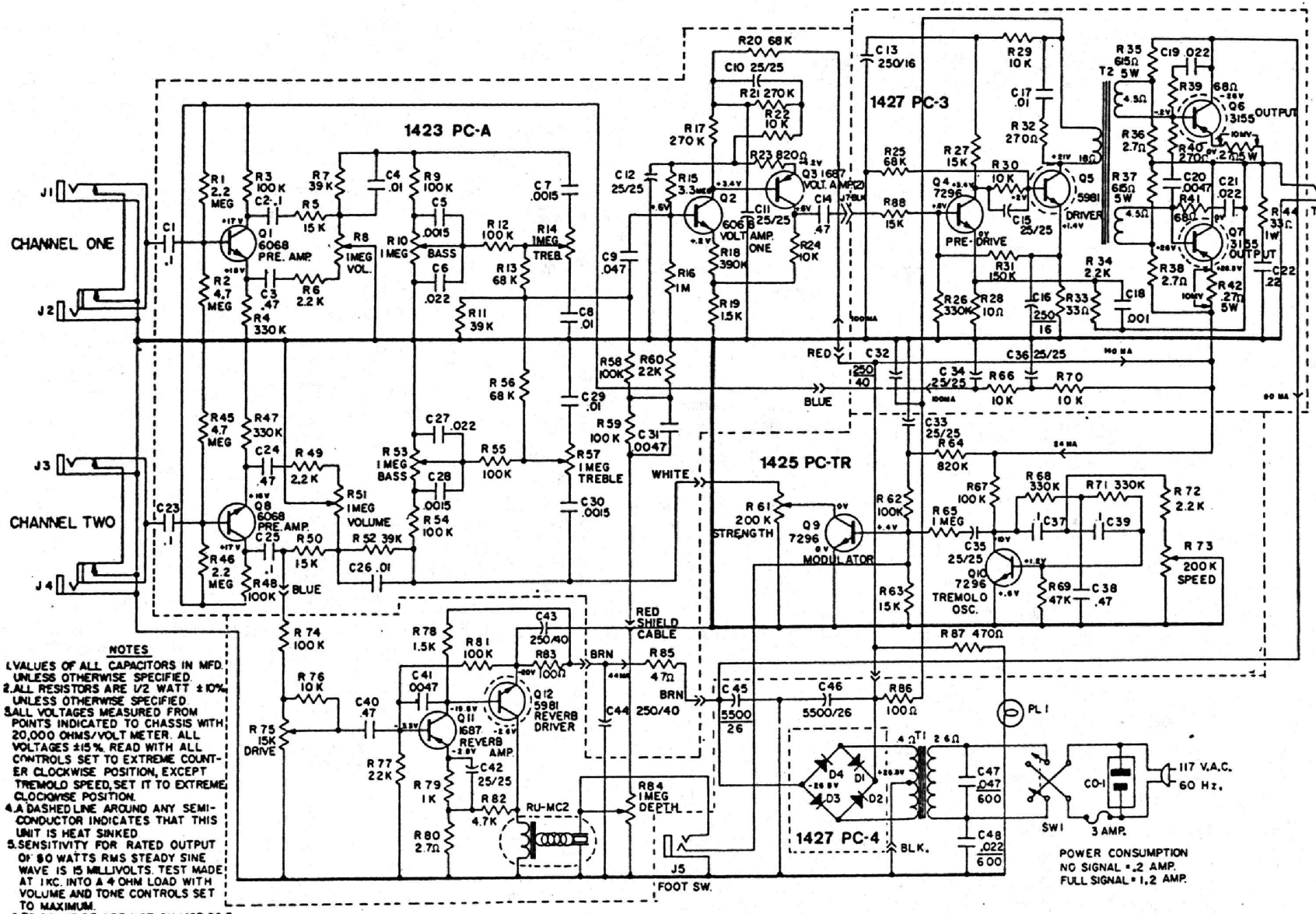

NOTES

1. VALUES OF ALL CAPACITORS IN MFD. UNLESS OTHERWISE SPECIFIED.
2. ALL RESISTORS ARE 1/2 WATT ±10% UNLESS OTHERWISE SPECIFIED
3. ALL VOLTAGES MEASURED FROM POINTS INDICATED TO CHASSIS WITH 20,000 OHMS/VOLT METER. ALL VOLTAGES ±15% READ WITH ALL CONTROLS SET TO EXTREME COUNTER CLOCKWISE POSITION, EXCEPT TREMOLO SPEED, SET IT TO EXTREME CLOCKWISE POSITION.
4. A DASHED LINE AROUND ANY SEMI-CONDUCTOR INDICATES THAT THIS UNIT IS HEAT SINKED
5. SENSITIVITY FOR RATED OUTPUT OF 60 WATTS RMS STEADY SINE WAVE IS 15 MILLIVOLTS. TEST MADE AT 1 KC. INTO A 4 OHM LOAD WITH VOLUME AND TONE CONTROLS SET TO MAXIMUM.
6. T2, Q6 AND Q7 ARE NOT ON 1427 PC-3 AS SHOWN, BUT ARE MOUNTED ON MAIN CHASSIS.

POWER CONSUMPTION
NO SIGNAL = .2 AMP.
FULL SIGNAL = 1.2 AMP.

Sears Silvertone Model 1423