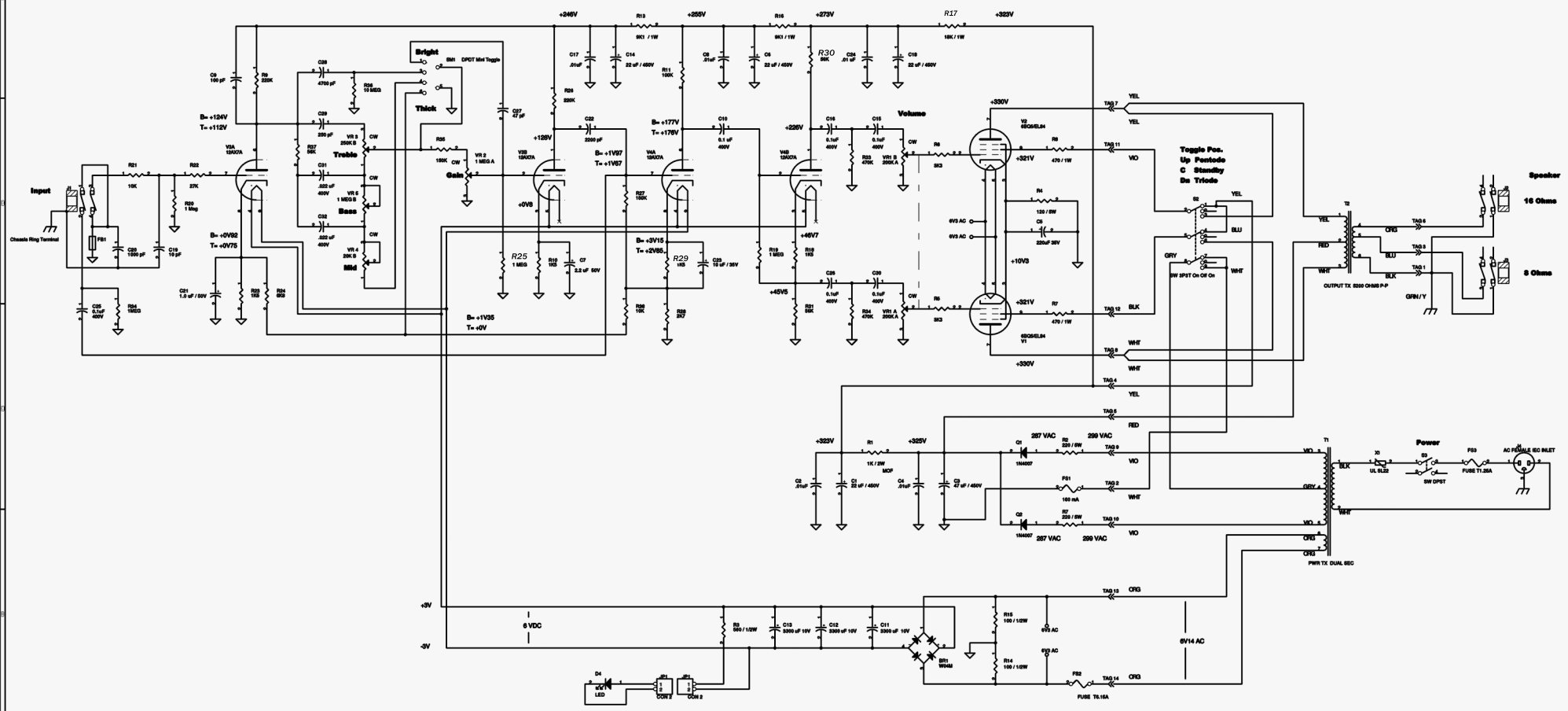

NOTES:

All voltages measured in Pentode Mode

AC Inlet voltage held constant at 120VAC 60 Hz for measurements

No signal applied. Gain and Volume set at Minimum CCW

B = Bright mode voltage T= Thick Mode voltage

Title	VOX Night Train NT-15		
Size D	Document Number PCB_NT15H_1001_0002		Rev C
Date: Friday, August 15, 2003		Sheet 1 of 1	