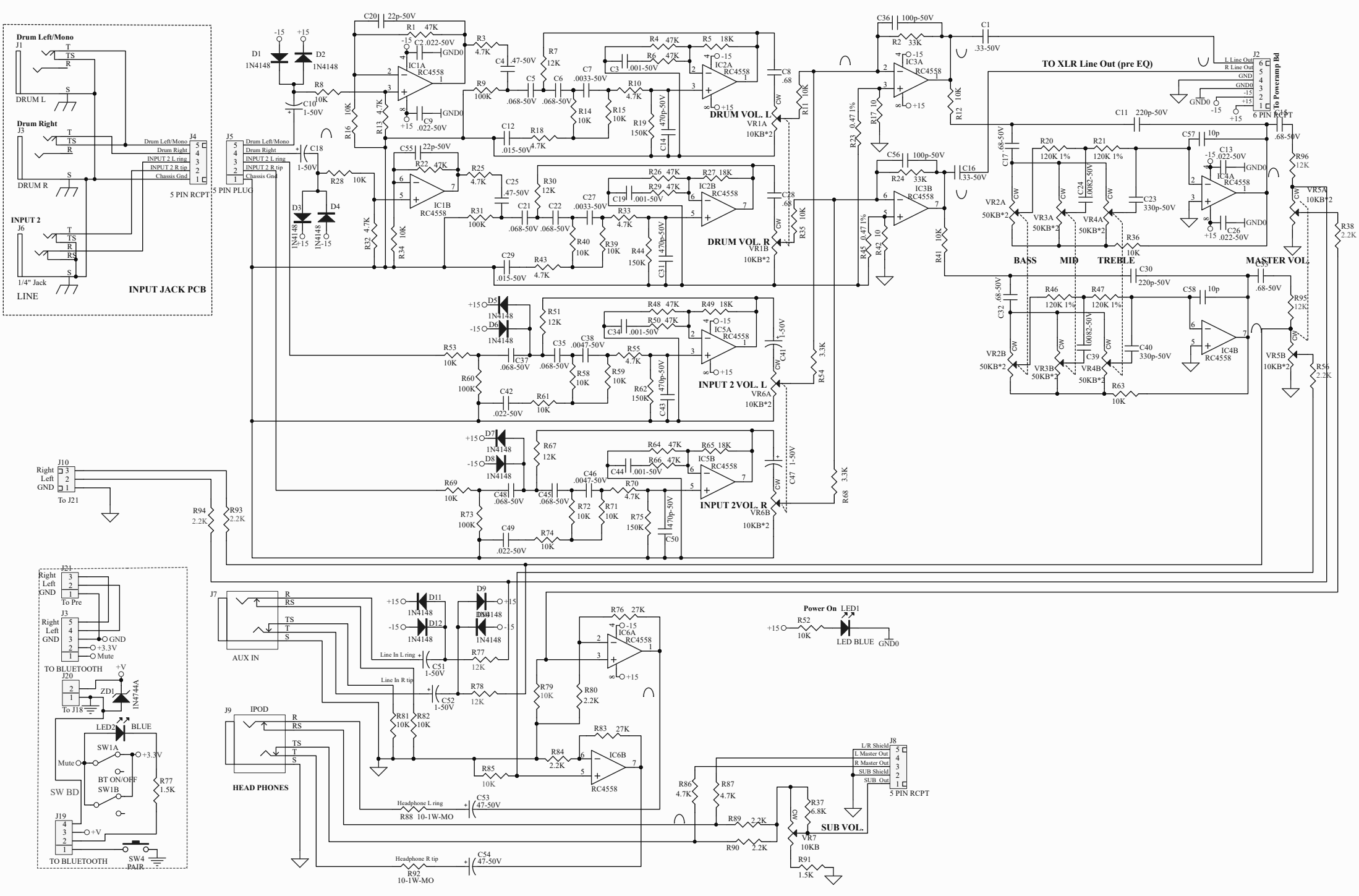
Drum Left/Mono
J1
DRUM L
Drum Right
J3
DRUM R
INPUT 2
J6
1/4" Jack
LINE
INPUT JACK PCB
J4
5 PIN RCPT
J5
5 PIN PLUG
Drum Left/Mono
Drum Right
INPUT 2 L ring
INPUT 2 R tip
Chassis Gnd
IC1A RC4558
IC1B RC4558
IC2A RC4558
IC2B RC4558
IC3A RC4558
IC3B RC4558
IC4A RC4558
IC4B RC4558
IC5A RC4558
IC5B RC4558
IC6A RC4558
IC6B RC4558
DRUM VOL. L
VR1A 10KB*2
DRUM VOL. R
VR1B 10KB*2
INPUT 2 VOL. L
VR6A 10KB*2
INPUT 2VOL. R
VR6B 10KB*2
TO XLR Line Out (pre EQ)
J2
To Poweramp Bd
6 PIN RCPT
BASS
MID
TREBLE
MASTER VOL.
VR2A 50KB*2
VR3A 50KB*2
VR4A 50KB*2
VR5A 10KB*2
VR2B 50KB*2
VR3B 50KB*2
VR4B 50KB*2
VR5B 10KB*2
Right
Left
GND
J10
To J21
J21
To Pre
J3
+3.3V
Mute
TO BLUETOOTH
J20
To J18
ZD1
1N4744A
LED2
BLUE
SW1A
SW1B
BT ON/OFF
SW BD
J19
SW4
PAIR
AUX IN
J7
Line In L ring
Line In R tip
J9
IPOD
HEAD PHONES
Headphone L ring
R88 10-1W-MO
Headphone R tip
R92 10-1W-MO
SUB VOL.
VR7 10KB
J8
L/R Shield
L Master Out
R Master Out
SUB Shield
SUB Out
5 PIN RCPT
Power On
LED1
LED BLUE
GND0

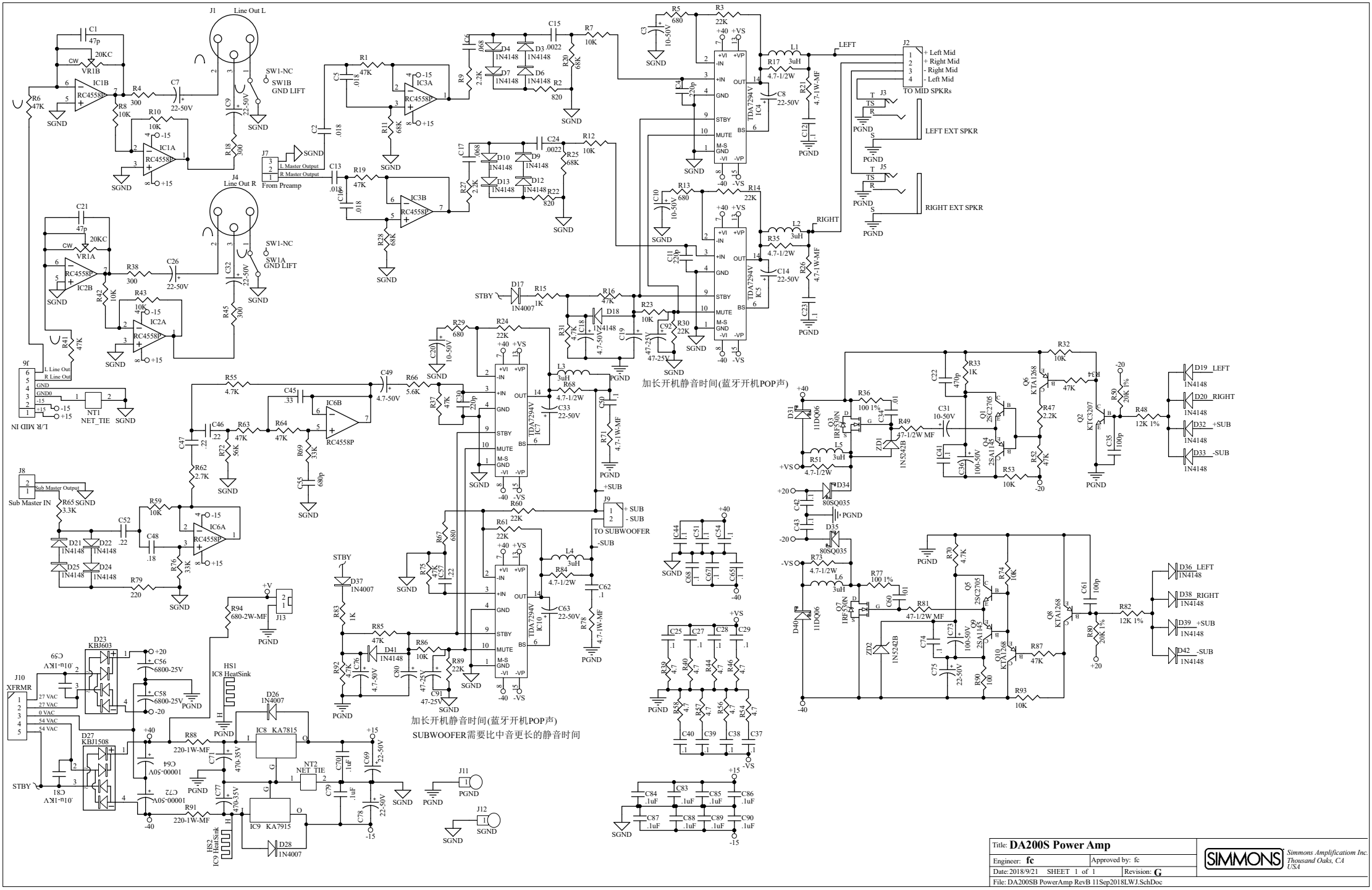

Title: **DA200S Power Amp**		SIMMONS Simmons Amplificatiom Inc. Thousand Oaks, CA USA
Engineer: **fc**	Approved by: fc	
Date: 2018/9/21 SHEET 1 of 1	Revision: **G**	
File: DA200SB PowerAmp RevB 11Sep2018LWJ.SchDoc		