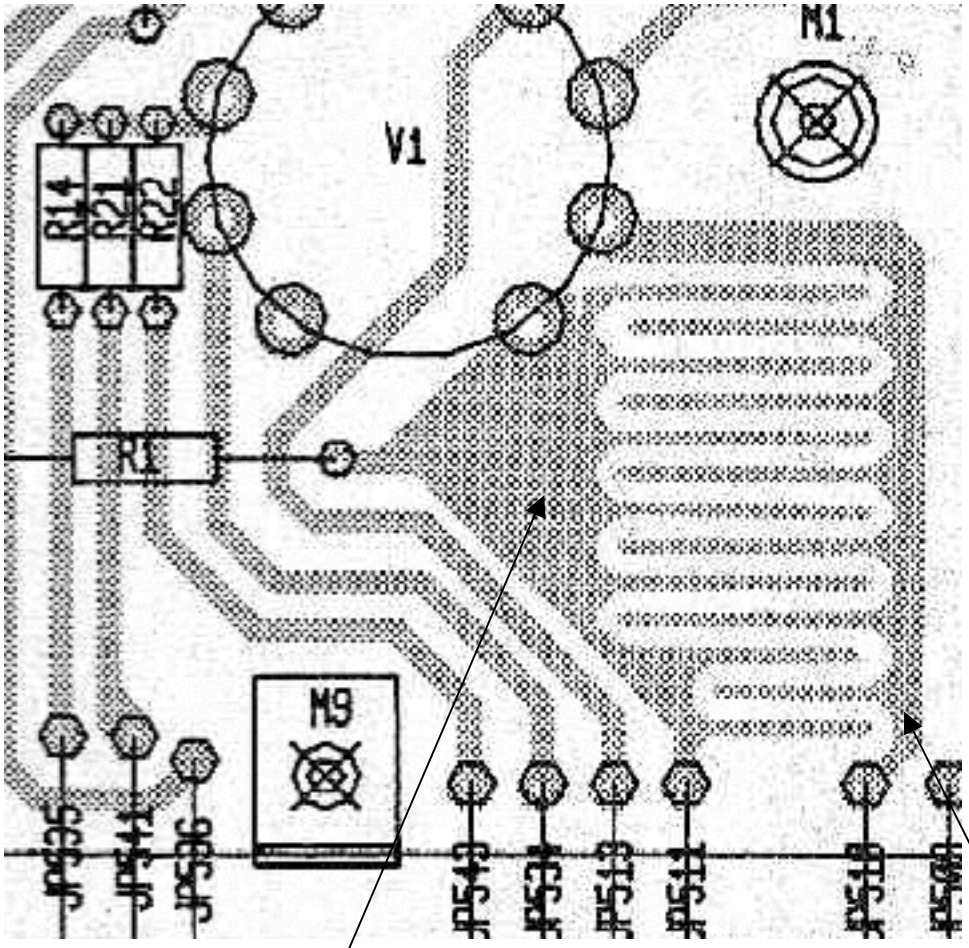

Plate of V1A

Grid signal (after the grid stopper etc)