"MEDIA NOX" Rev.2 © by Rexindigo 2007
"Power-Section"

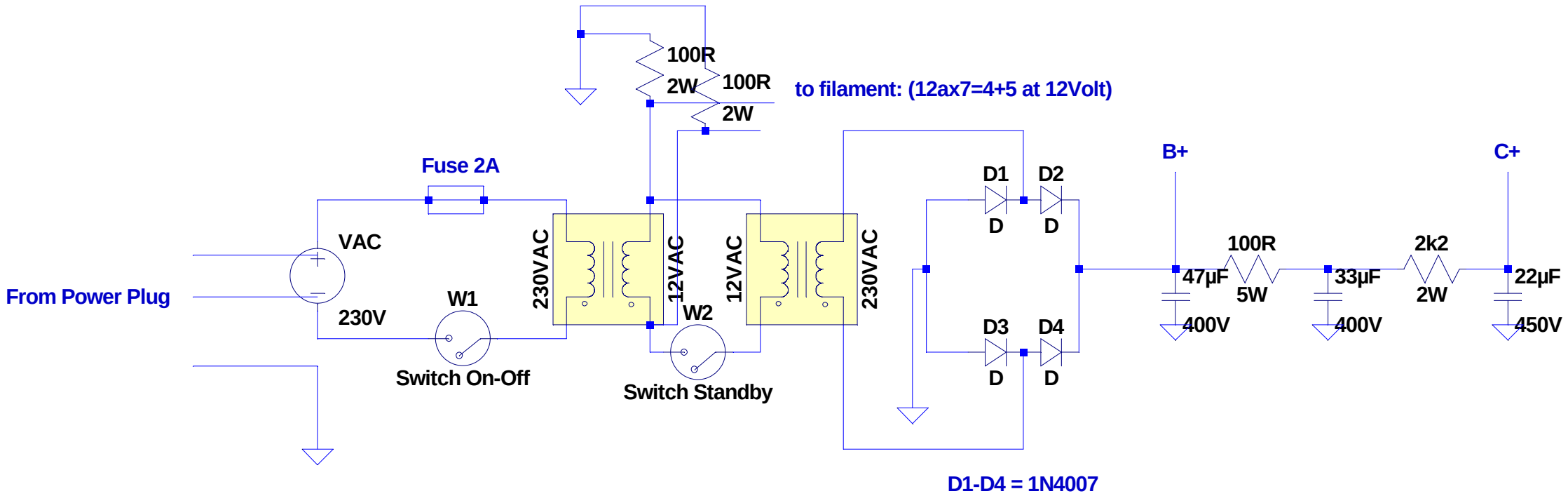

--- C:\Programme\LTC\SwCADIII\medianox_power.asc ---