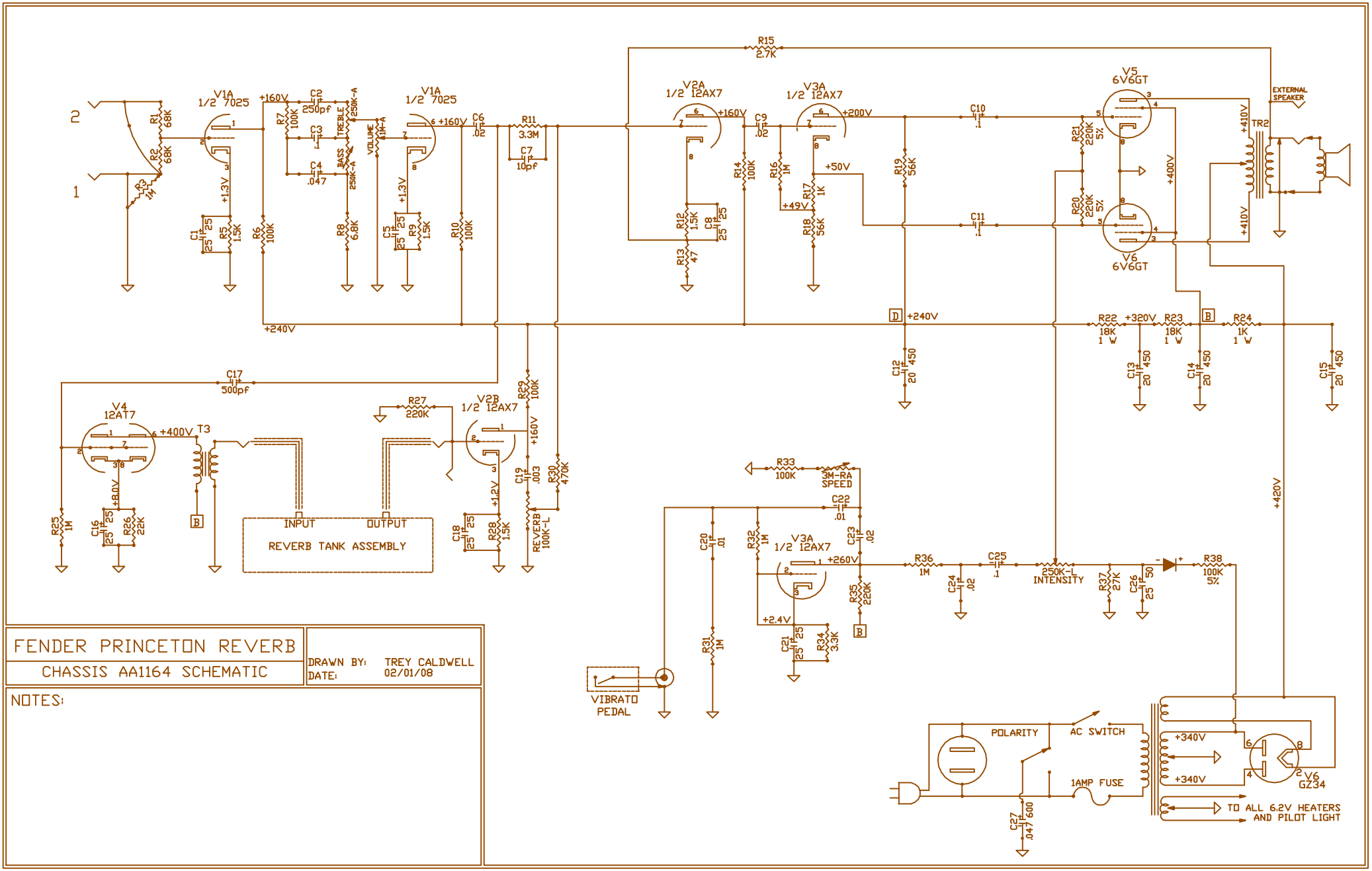
FENDER PRINCETON REVERB
CHASSIS AA1164 SCHEMATIC
DRAWN BY: TREY CALDWELL
DATE: 02/01/08
NOTES:
V1A 1/2 7025
V2A 1/2 12AX7
V3A 1/2 12AX7
V5 6V6GT
V6 6V6GT
V4 12AT7
V2B 1/2 12AX7
V3A 1/2 12AX7
V6 GZ34
TR2
EXTERNAL SPEAKER
TREBLE 250K-A
BASS 250K-A
VOLUME 1M-A
3M-RA SPEED
250K-L INTENSITY
REVERB 100K-L
INPUT
OUTPUT
REVERB TANK ASSEMBLY
VIBRATO PEDAL
POLARITY
AC SWITCH
1AMP FUSE
TO ALL 6.2V HEATERS AND PILOT LIGHT
+160V
+200V
+240V
+320V
+400V
+410V
+420V
+340V
+50V
+49V
+260V
+2.4V
+1.3V
+1.2V
+8.0V