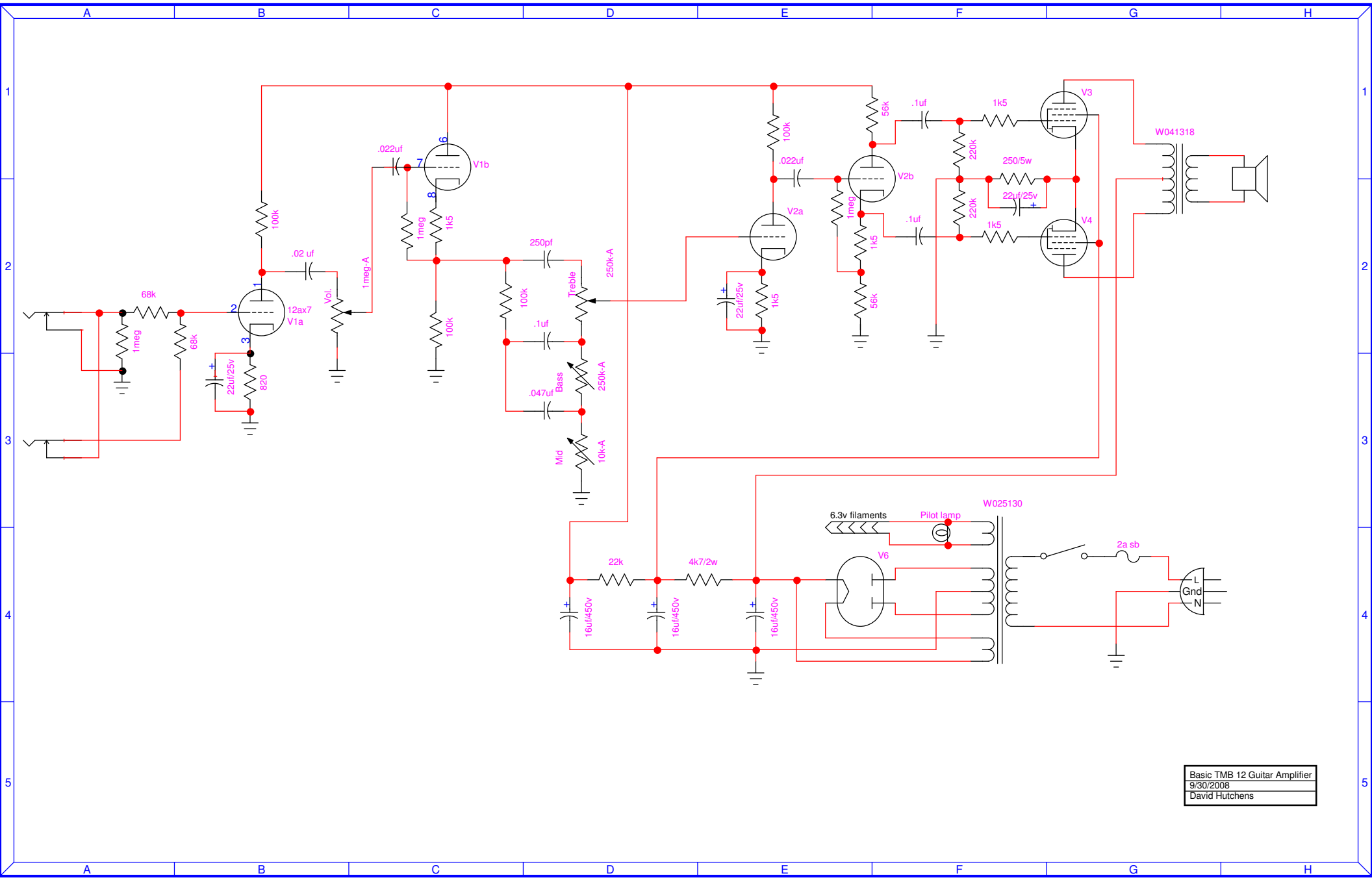
A
B
C
D
E
F
G
H
1
2
3
4
5
68k
1meg
68k
12ax7
V1a
22uf/25v
820
100k
.02 uf
Vol.
1meg-A
.022uf
V1b
1meg
1k5
100k
250pf
100k
.1uf
.047uf
Bass
250k-A
Treble
250k-A
Mid
10k-A
100k
.022uf
V2a
22uf/25v
1k5
56k
V2b
1meg
1k5
56k
.1uf
220k
220k
.1uf
1k5
1k5
250/5w
22uf/25v
V3
V4
W041318
6.3v filaments
Pilot lamp
W025130
V6
22k
4k7/2w
16uf/450v
16uf/450v
16uf/450v
2a sb
L
Gnd
N
Basic TMB 12 Guitar Amplifier
9/30/2008
David Hutchens