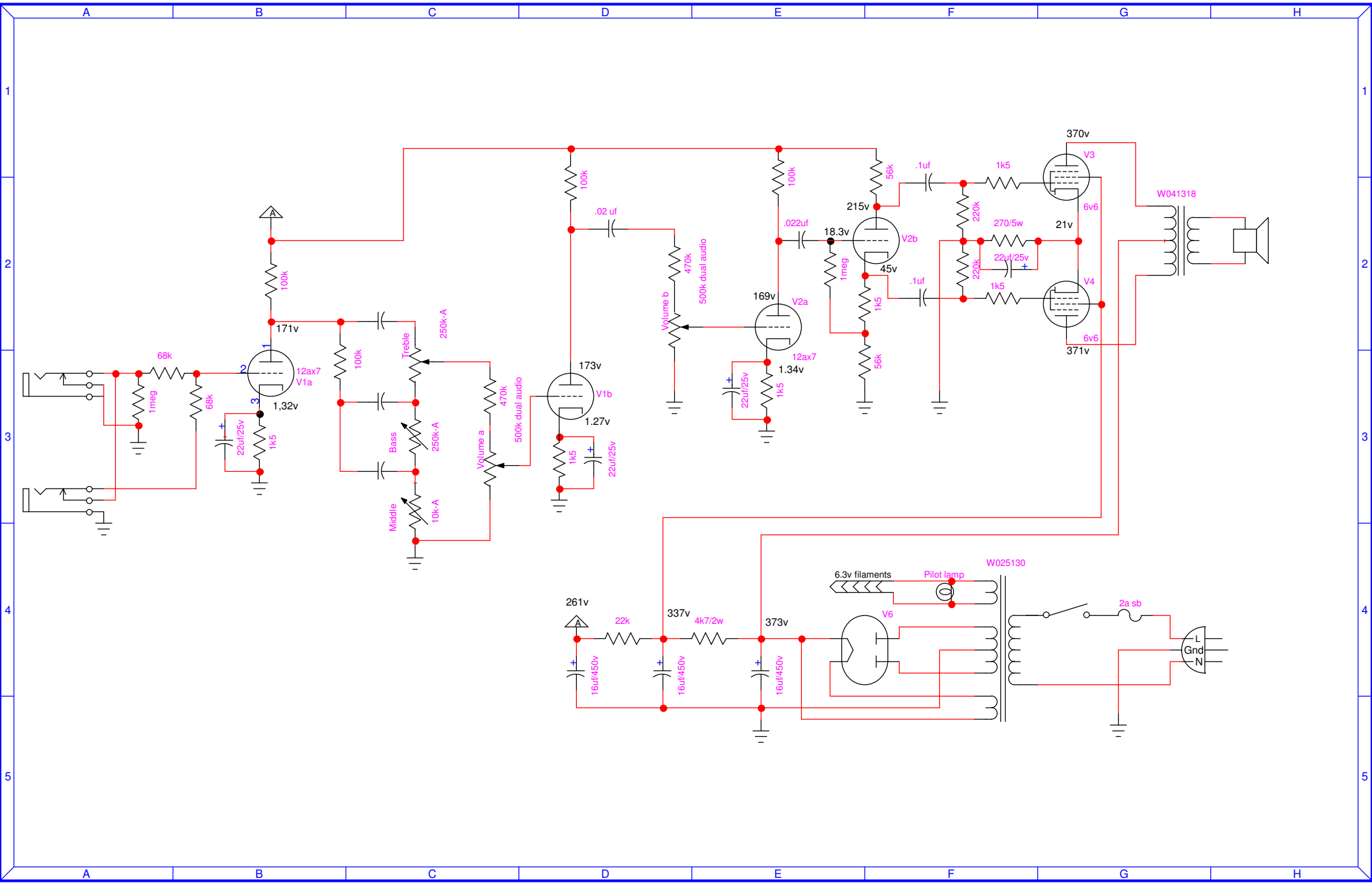
A
B
C
D
E
F
G
H
1
2
3
4
5
68k
1meg
68k
22uf/25v
1k5
171v
12ax7
V1a
1,32v
100k
Treble
250k-A
Bass
250k-A
Middle
10k-A
Volume a
470k
500k dual audio
100k
173v
V1b
1.27v
1k5
22uf/25v
.02 uf
Volume b
470k
500k dual audio
100k
.022uf
169v
V2a
12ax7
1.34v
22uf/25v
1k5
18.3v
1meg
215v
V2b
45v
1k5
56k
56k
.1uf
220k
220k
.1uf
1k5
1k5
270/5w
22uf/25v
370v
V3
6v6
21v
V4
6v6
371v
W041318
261v
22k
16uf/450v
337v
4k7/2w
16uf/450v
373v
16uf/450v
6.3v filaments
Pilot lamp
V6
W025130
2a sb
L
Gnd
N